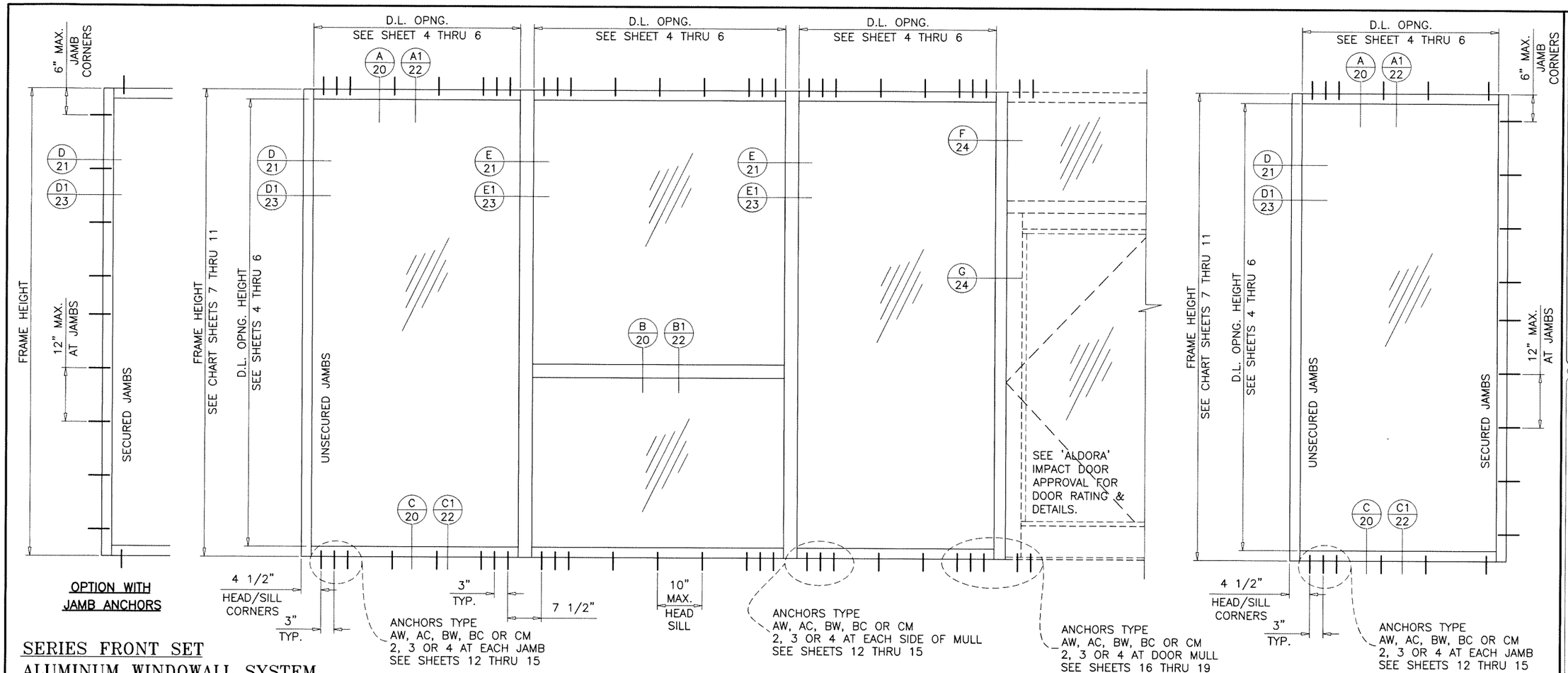

TYPICAL ELEVATIONS

SERIES FRONT SET ALUMINUM WINDOWALL SYSTEM

THIS SYSTEM MAY BE USED IN CONJUNCTION WITH F.B.C. APPROVED LARGE MISSILE IMPACT RESISTANT DOORS. LOWER DESIGN PRESSURE FROM STOREFRONT OR DOOR APPROVAL WILL APPLY TO ENTIRE SYSTEM.

THIS PRODUCT HAS BEEN DESIGNED AND TESTED TO COMPLY WITH THE REQUIREMENTS OF THE 2023 (8TH EDITION) FLORIDA BUILDING CODE INCLUDING HIGH VELOCITY HURRICANE ZONE (HVHZ).

1BY OR 2BY WOOD BUCKS & BUCK FASTENERS BY OTHERS, MUST BE DESIGNED AND INSTALLED ADEQUATELY TO TRANSFER APPLIED PRODUCT LOADS TO THE BUILDING STRUCTURE.

ANCHORS SHALL BE CORROSION RESISTANT, SPACED AS SHOWN ON DETAILS AND INSTALLED PER MANUF'S INSTRUCTIONS. SPECIFIED EMBEDMENT TO BASE MATERIAL SHALL BE BEYOND WALL DRESSING OR STUCCO.

A LOAD DURATION INCREASE IS USED IN DESIGN OF ANCHORS INTO WOOD ONLY.

ALL SHIMS TO BE HIGH IMPACT, NON-METALLIC AND NON-COMPRESSIBLE.

MATERIALS INCLUDING BUT NOT LIMITED TO STEEL/METAL SCREWS, THAT COME INTO CONTACT WITH OTHER DISSIMILAR MATERIALS SHALL MEET THE REQUIREMENTS OF THE 2023 FLORIDA BLDG. CODE & ADOPTED STANDARDS.

THIS PRODUCT APPROVAL IS GENERIC AND DOES NOT PROVIDE INFORMATION FOR A SITE SPECIFIC PROJECT, i.e. LIFE SAFETY OF THIS PRODUCT, ADEQUACY OF STRUCTURE RECEIVING THIS PRODUCT AND SEALING AROUND OPENING FOR WATER INFILTRATION RESISTANCE ETC.
CONDITIONS NOT SHOWN IN THIS DRAWING ARE TO BE ANALYZED SEPARATELY, AND TO BE REVIEWED BY BUILDING OFFICIAL.

DESIGN LOADS SHOWN ARE BASED ON 'ALLOWABLE STRESS DESIGN (ASD)'.

MANUFACTURER'S LABEL SHALL BE LOCATED ON A READILY VISIBLE LOCATION IN ACCORDANCE WITH SECTION 1709.9.3 OF FLORIDA BUILDING CODE. LABELING TO COMPLY WITH SECTION 1709.9.2.

INSTRUCTIONS: USE CHARTS AS FOLLOWS.

STEP 1 DETERMINE DESIGN WIND PRESSURE REQUIREMENTS BASED ON WIND VELOCITY, BLDG. HEIGHT, WIND ZONE USING APPLICABLE ASCE 7 STANDARD.

STEP 2 SEE CHARTS ON SHEETS 3 THRU 6.1 FOR DESIGN LOAD CAPACITY OF DESIRED GLASS SIZE.

STEP 3 CHECK MULLION DESIGN LOAD CAPACITY FOR A GIVEN SPACING AND HEIGHT USING CHARTS ON SHEETS 7 THRU 11.1.
THE CAPACITY SHOULD EXCEED THE DESIGN LOAD.

STEP 4 USING CHARTS ON SHEETS 12 THRU 15 SELECT ANCHOR OPTION WITH DESIGN LOAD CAPACITY MORE THAN DESIGN LOAD SPECIFIED IN STEP 1 ABOVE.

STEP 5 THE LOWEST VALUE RESULTING FROM STEPS 2, 3 AND 4 THAT EXCEED THE DESIGN WIND PRESSURES DETERMINED THRU STEP 1 SHALL APPLY TO ENTIRE SYSTEM.

STEP 6 FOR UNANCHORED JAMBS, USING SHEET 21, DETERMINE THE MIN. & MAX. GAP DIMENSIONS.

STEP 7 WHEN USING THIS SYSTEM WITH DOORS, SEE SHEETS 16 THRU 19.1 FOR DOOR MULLION AND DOOR MULLION ANCHOR CAPACITY.
THE LOWER VALUE OF THE DESIGN PRESSURE RATING FOR THE SYSTEM AND THE DOOR SHALL APPLY.

SINGLE 'O' PANEL:
FRAME WIDTH = D.L.O. WIDTH + 4.50"
FRAME HEIGHT = D.L.O. HEIGHT + 4.50"

PRODUCT COMPLIES WITH REQUIREMENTS OF ANSI Z97.1.

THIS SYSTEM IS RATED FOR LARGE & SMALL MISSILE IMPACT.
SHUTTERS ARE NOT REQUIRED.
WINDOW WALL FRAMES MAY BE WITH OR WITHOUT THERMAL BREAK.

Sealed: 8/19/2025

FL #19973

JALAL FAROOQ LICENSE No. 81223 STATE OF FLORIDA PROFESSIONAL ENGINEER

A- CONTRACTOR TO BE RESPONSIBLE FOR THE SELECTION, PURCHASE AND INSTALLATION OF THIS PRODUCT BASED ON THIS PRODUCT EVALUATION PROVIDED HE/SHE DOES NOT DEVIATE FROM THE CONDITIONS DETAILED ON THIS DOCUMENT.

B- THIS PRODUCT EVALUATION DOCUMENT WILL BE CONSIDERED INVALID IF ALTERED BY ANY MEANS.

C- SITE SPECIFIC PROJECTS SHALL BE PREPARED BY A FLORIDA REGISTERED ENGINEER OR ARCHITECT WHICH WILL BECOME THE ENGINEER OF RECORD (E.O.R.) FOR THE PROJECT AND WHO WILL BE RESPONSIBLE FOR THE PROPER USE OF THE P.E.D. ENGINEER OF RECORD, ACTING AS A DELEGATED ENGINEER TO THE P.E.D. ENGINEER SHALL SUBMIT TO THIS LATTER THE SITE SPECIFIC DRAWINGS FOR REVIEW.

D- THIS P.E.D. SHALL BEAR THE DATE AND ORIGINAL SEAL AND SIGNATURE OF THE PROFESSIONAL ENGINEER OF RECORD THAT PREPARED IT.

AL-FAROOQ CORPORATION
ENGINEERS & PRODUCT DEVELOPMENT
9360 SUNSET DRIVE, SUITE 220
MIAMI, FLORIDA 33173 (C.A.N. 3538)
TEL. (305) 264-8100 FAX. (305) 262-6978

COMP-ANL\21-51FAGP

SERIES FRONT SET ALUM WINDOWALL SYS. (L.M.I.)

Aldora Aluminum & Glass Products Inc.
4250 Coral Ridge Drive, Suite 101
Coral Springs, FL. 33065
Tel. (954) 784-6900 Fax. (954) 784-6901

revisions:

no	date	by	description
A	08.30.21		GLASS TYPE F1 ADDED
B	03.29.22		GLASS TYPES E & F ADDED
C	06.13.23		GLASS TYPE G ADDED
D	04.02.24		SHEET 2.1 ADDED
E	10.08.24		SHEET 5.1 REVISED

date: 06-10-21
scale: 1/2"=1'-0"
dr. by: TARIQ
chk. by:

drawing no. 21-51F

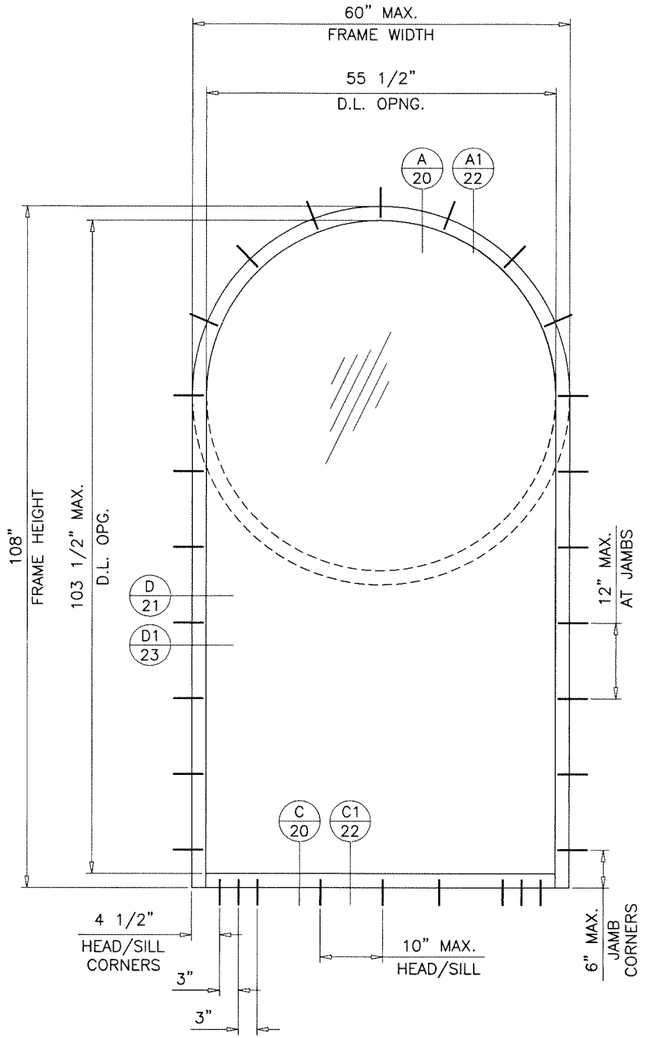

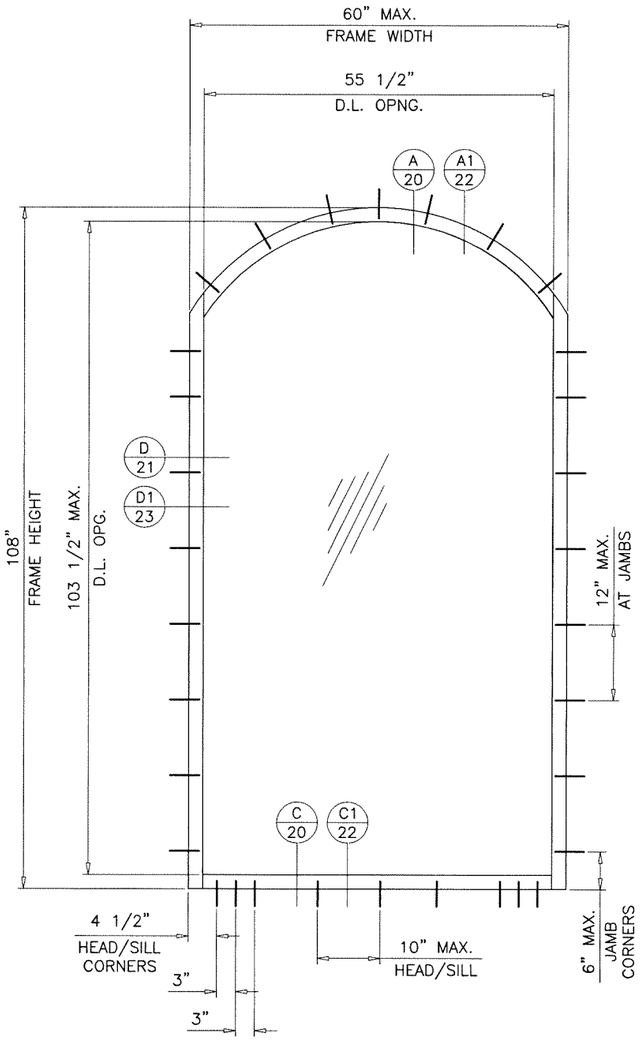

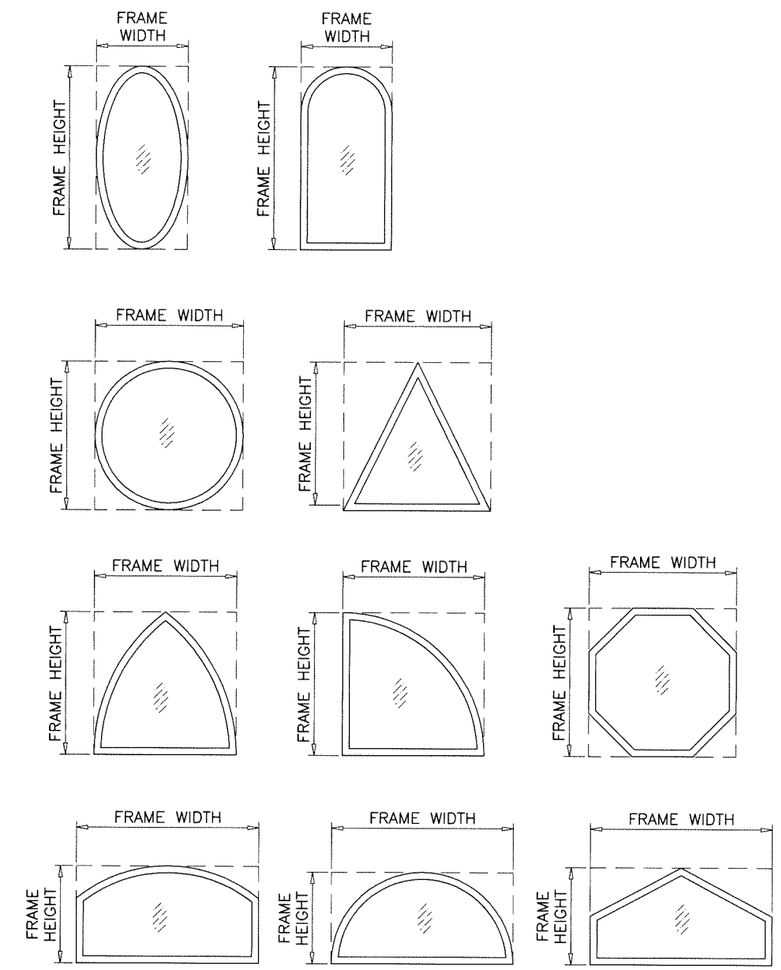

ALLOWABLE LOADS FOR ALTERNATE SHAPES AS SHOWN ABOVE OR SIMILAR CAN BE VERIFIED BY INSCRIBING WINDOW SHAPE WITHIN SQUARE OR RECTANGLE AS SHOWN IN DOTTED LINES AND OBTAINING ALLOWABLE LOADS FROM THOSE SHAPES. INSTALLATION ANCHORS AT 4-1/2" FROM FRAME CORNERS AND 10" O.C. MAX.

GLASS TYPE 'B' & 'Bi'

MAXIMUM DESIGN LOAD RATING = + 80.0 PSF
− 100.0 PSF

(FOR SHAPES AND SIZE SHOWN ON THIS SHEET ONLY)

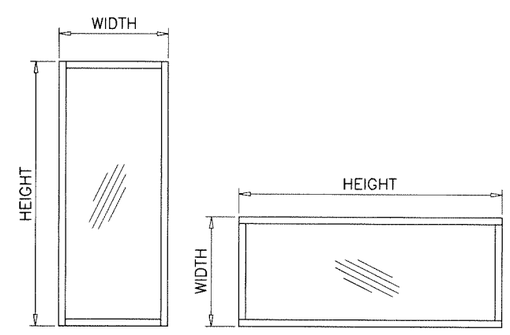

NOTE:
WIDTH AND HEIGHT DIMENSIONS CAN BE ORIENTED VERTICALLY OR HORIZONTALLY AS SHOWN ABOVE.

Sealed: 8/19/2025

JALAL FAROOQ
LICENSE
No. 81223
STATE OF FLORIDA
PROFESSIONAL ENGINEER

FL #19973

AL-FAROOQ CORPORATION
ENGINEERS & PRODUCT DEVELOPMENT
9360 SUNSET DRIVE, SUITE 220
MIAMI, FLORIDA 33173 (C.A.N. 3538)
TEL. (305) 264-8100 FAX. (305) 262-6978

COMP-ANL\21-51FAGP

SERIES FRONT SET ALUM WINDOWALL SYS. (L.M.I.)

Aldora Aluminum & Glass Products Inc.
4250 Coral Ridge Drive, Suite 101
Coral Springs, FL. 33065
Tel. (954) 784-6900 Fax. (954) 784-6901

revisions:

no	date	by	description

date: 06-10-21
scale: 1/2"=1'-0"
dr. by: TARIQ
chk. by:

drawing no.
21-51F

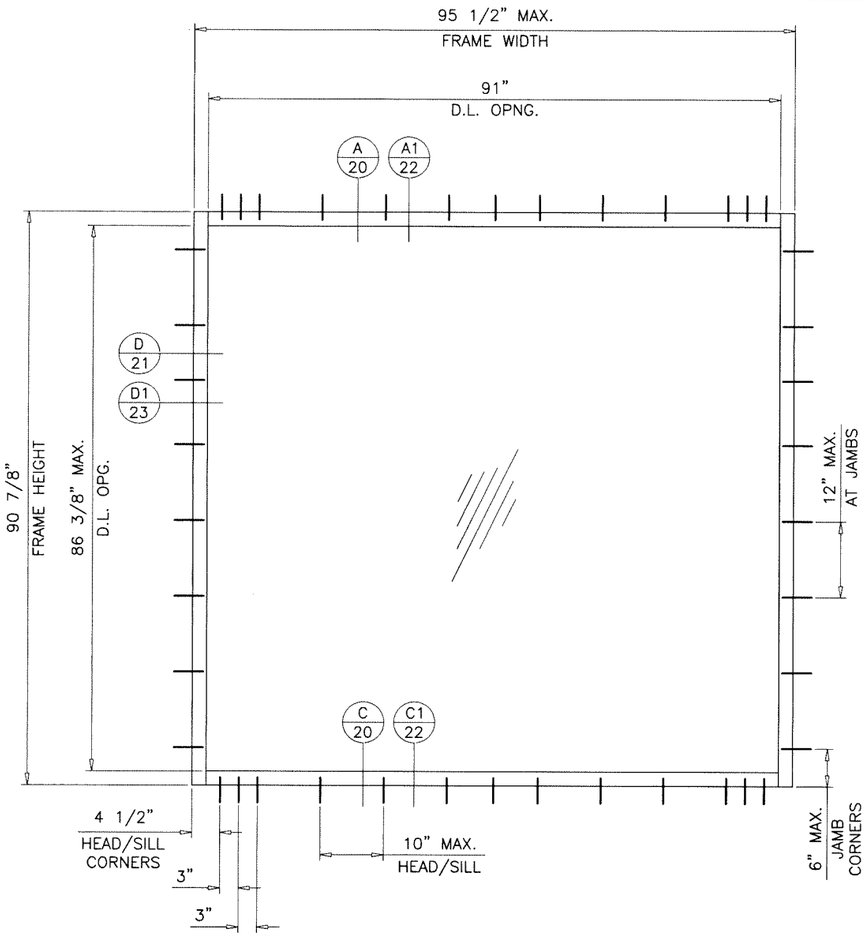

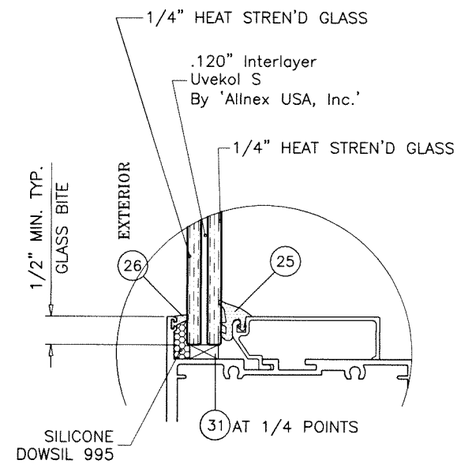

GLASS TYPE 'B1'

GLASS TYPE 'B1'

MAXIMUM DESIGN LOAD RATING = + 70.0 PSF
− 70.0 PSF

(FOR SIZE SHOWN ON THIS SHEET ONLY)

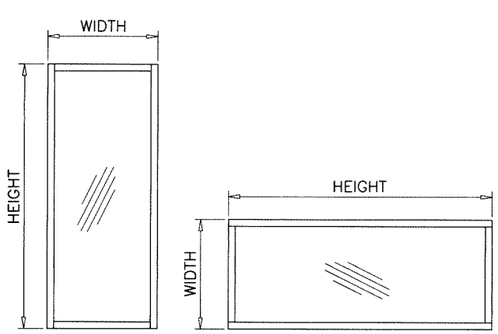

NOTE:
WIDTH AND HEIGHT DIMENSIONS CAN BE ORIENTED VERTICALLY OR HORIZONTALLY AS SHOWN ABOVE.

Sealed: 8/19/2025

JALAL FAROOQ
LICENSE
No. 81223
STATE OF FLORIDA
PROFESSIONAL ENGINEER

FL #19973

AL-FAROOQ CORPORATION
ENGINEERS & PRODUCT DEVELOPMENT
9360 SUNSET DRIVE, SUITE 220
MIAMI, FLORIDA 33173 (C.A.N. 3538)
TEL. (305) 264-8100 FAX. (305) 262-6978
COMP-ANL\21-51FAGP

SERIES FRONT SET ALUM WINDOWALL SYS. (L.M.I.)

Aldora Aluminum & Glass Products Inc.
4250 Coral Ridge Drive, Suite 101
Coral Springs, FL. 33065
Tel. (954) 784-6900 Fax. (954) 784-6901

revisions:

no	date	by	description

date: 06-10-21
scale: 1/2"=1'-0"
dr. by: TARIQ
chk. by:

drawing no.
21-51F

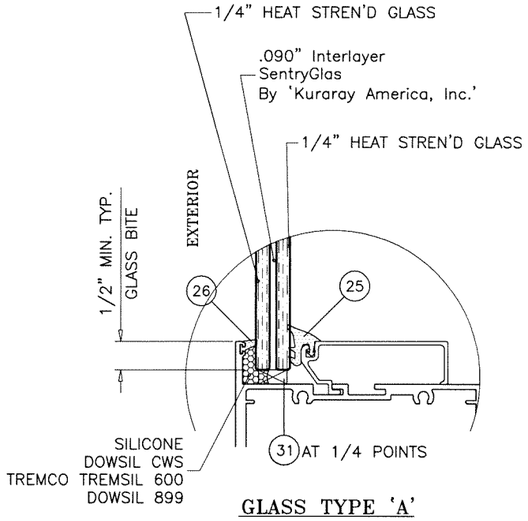

GLASS TYPE 'A'

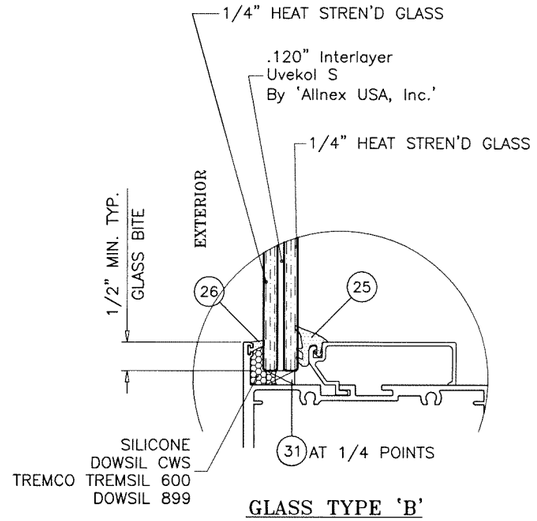

GLASS TYPE 'B'

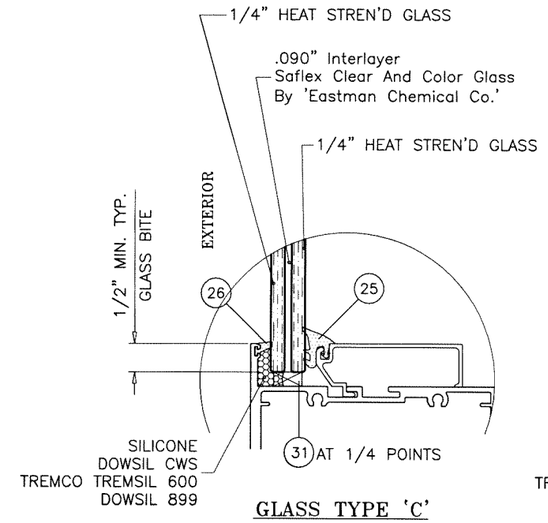

GLASS TYPE 'C'

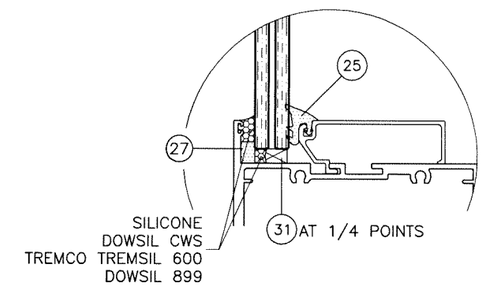

ALTERNATE GLAZING DETAIL
OPTIONAL FOR GLASS TYPES 'A', 'B' & 'C'

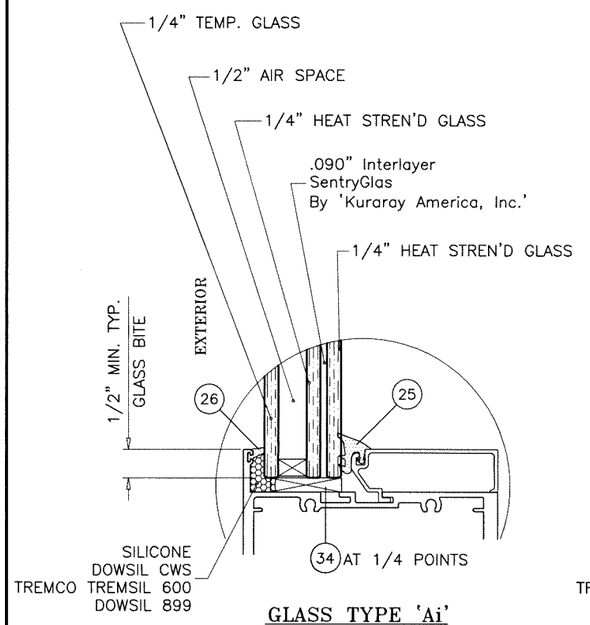

GLASS TYPE 'Ai'

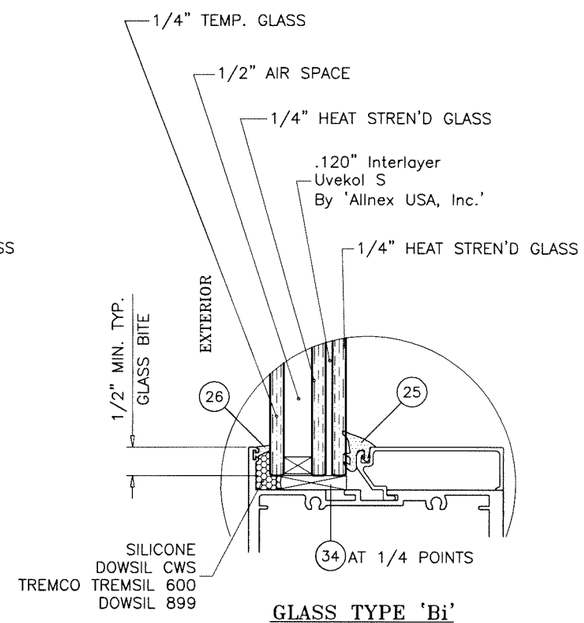

GLASS TYPE 'Bi'

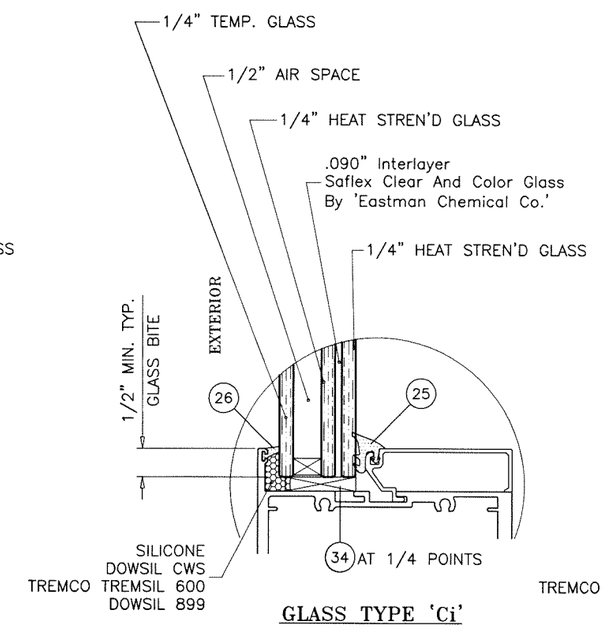

GLASS TYPE 'Ci'

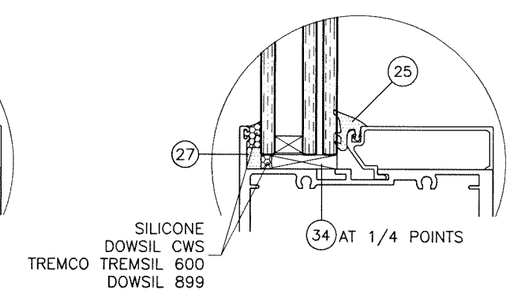

ALTERNATE GLAZING DETAIL
OPTIONAL FOR GLASS TYPES 'Ai', 'Bi' & 'Ci'

1/2" AIR SPACE CONSISTING OF:
SPACER:
'PROFIGLASS' ALUMINUM SPACER
BY 'RAMAPO USA'
PERIMETER SEALANT:
SILICONE
DOWSIL CWS
DOWSIL 899
GE 2000
PECORA 895

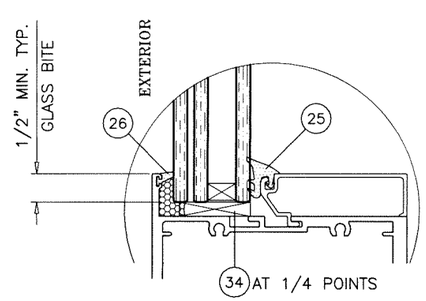

LAMINATED GLASS ON EXTERIOR
OPTIONAL FOR GLASS TYPES 'Ai', 'Bi' & 'Ci'

Sealed: 8/19/2025

GLAZING DETAILS LEVEL 'D' IMPACT

GLASS
(LEVEL 'D' IMPACT)

FL #19973

JALAL FAROOQ
LICENSE
No. 81223
STATE OF FLORIDA
PROFESSIONAL ENGINEER

AL-FAROOQ CORPORATION
ENGINEERS & PRODUCT DEVELOPMENT
9360 SUNSET DRIVE, SUITE 220
MIAMI, FLORIDA 33173 (C.A.N. 3538)
TEL. (305) 264-8100 FAX. (305) 262-6978

COMP-ANL\21-51FAGP

SERIES FRONT SET ALUM WINDOWALL SYS. (L.M.I.)

Aldora Aluminum & Glass Products Inc.
4250 Coral Ridge Drive, Suite 101
Coral Springs, FL. 33065
Tel. (954) 784-6900 Fax. (954) 784-6901

revisions:

no	date	by	description

date: 06-10-21
scale: 3/8" = 1"
dr. by: TARIQ
chk. by:

drawing no. 21-51F

GLASS LOAD CAPACITY – PSF

NOMINAL DIMS.		GLASS TYPES					
		'A' & 'Ai'		'B' & 'Bi'		'C' & 'Ci'	
D.L.O. WIDTH	D.L.O. HEIGHT	EXT.(+)	INT.(–)	EXT.(+)	INT.(–)	EXT.(+)	INT.(–)
33"	73–1/2"	120.0	135.0	120.0	135.0	65.0	75.0
36"		120.0	135.0	120.0	135.0	65.0	75.0
39"		120.0	135.0	120.0	135.0	65.0	75.0
42"		120.0	135.0	120.0	135.0	65.0	75.0
45"		120.0	135.0	120.0	135.0	65.0	75.0
48"		120.0	135.0	120.0	135.0	65.0	75.0
51"		120.0	135.0	120.0	135.0	65.0	75.0
54"		120.0	135.0	120.0	135.0	65.0	75.0
57"		120.0	135.0	120.0	135.0	65.0	75.0
60"		120.0	135.0	120.0	135.0	65.0	75.0
63"		90.0	90.0	100.0	100.0	65.0	75.0
66"		80.0	80.0	100.0	100.0	65.0	75.0
69"		80.0	80.0	100.0	100.0	65.0	75.0
33"	79–1/2"	120.0	135.0	120.0	135.0	65.0	75.0
36"		120.0	135.0	120.0	135.0	65.0	75.0
39"		120.0	135.0	120.0	135.0	65.0	75.0
42"		120.0	135.0	120.0	135.0	65.0	75.0
45"		120.0	135.0	120.0	135.0	65.0	75.0
48"		120.0	135.0	120.0	135.0	65.0	75.0
51"		120.0	135.0	120.0	135.0	65.0	75.0
54"		120.0	135.0	120.0	135.0	65.0	75.0
57"		90.0	90.0	100.0	100.0	65.0	75.0
60"		80.0	80.0	100.0	100.0	65.0	75.0
63"		80.0	80.0	100.0	100.0	65.0	75.0
66"		80.0	80.0	100.0	100.0	–	–
69"		80.0	80.0	100.0	100.0	–	–
33"	85–1/2"	120.0	135.0	120.0	135.0	65.0	75.0
36"		120.0	135.0	120.0	135.0	65.0	75.0
39"		120.0	135.0	120.0	135.0	65.0	75.0
42"		120.0	135.0	120.0	135.0	65.0	75.0
45"		120.0	135.0	120.0	135.0	65.0	75.0
48"		120.0	135.0	120.0	135.0	65.0	75.0
51"		120.0	135.0	120.0	135.0	65.0	75.0
54"		90.0	90.0	100.0	100.0	65.0	75.0
57"		80.0	80.0	100.0	100.0	65.0	75.0
60"		80.0	80.0	100.0	100.0	65.0	75.0
63"		80.0	80.0	100.0	100.0	–	–
66"		80.0	80.0	100.0	100.0	–	–
69"		80.0	80.0	80.0	80.0	–	–
33"	91–1/2"	120.0	135.0	120.0	135.0	65.0	75.0
36"		120.0	135.0	120.0	135.0	65.0	75.0
39"		120.0	135.0	120.0	135.0	65.0	75.0
42"		120.0	135.0	120.0	135.0	65.0	75.0
45"		120.0	135.0	120.0	135.0	65.0	75.0
48"		120.0	135.0	120.0	135.0	65.0	75.0
51"		80.0	80.0	100.0	100.0	65.0	75.0
54"		80.0	80.0	100.0	100.0	65.0	75.0
57"		80.0	80.0	100.0	100.0	–	–
60"		80.0	80.0	100.0	100.0	–	–
63"		80.0	80.0	80.0	80.0	–	–
66"		80.0	80.0	80.0	80.0	–	–
69"		80.0	80.0	80.0	80.0	–	–

GLASS LOAD CAPACITY – PSF

NOMINAL DIMS.		GLASS TYPES					
		'A' & 'Ai'		'B' & 'Bi'		'C' & 'Ci'	
D.L.O. WIDTH	D.L.O. HEIGHT	EXT.(+)	INT.(–)	EXT.(+)	INT.(–)	EXT.(+)	INT.(–)
33"	97–1/2"	120.0	135.0	120.0	135.0	65.0	75.0
36"		120.0	135.0	120.0	135.0	65.0	75.0
39"		120.0	135.0	120.0	135.0	65.0	75.0
42"		120.0	135.0	120.0	135.0	65.0	75.0
45"		120.0	135.0	120.0	135.0	65.0	75.0
48"		80.0	80.0	100.0	100.0	65.0	75.0
51"		80.0	80.0	100.0	100.0	65.0	75.0
54"		80.0	80.0	100.0	100.0	–	–
57"		80.0	80.0	100.0	100.0	–	–
60"		80.0	80.0	80.0	80.0	–	–
63"		80.0	80.0	80.0	80.0	–	–
66"		80.0	80.0	80.0	80.0	–	–
69"		60.0	60.0	80.0	80.0	–	–
33"	103–1/2"	120.0	135.0	120.0	135.0	65.0	75.0
36"		120.0	135.0	120.0	135.0	65.0	75.0
39"		120.0	135.0	120.0	135.0	65.0	75.0
42"		120.0	135.0	120.0	135.0	65.0	75.0
45"		90.0	90.0	100.0	100.0	65.0	75.0
48"		80.0	80.0	100.0	100.0	65.0	75.0
51"		80.0	80.0	100.0	100.0	–	–
54"		80.0	80.0	100.0	100.0	–	–
57"		80.0	80.0	80.0	80.0	–	–
60"		80.0	80.0	80.0	80.0	–	–
63"		80.0	80.0	80.0	80.0	–	–
66"		60.0	60.0	80.0	80.0	–	–
69"		60.0	60.0	80.0	80.0	–	–
33"	109–1/2"	120.0	135.0	120.0	135.0	65.0	75.0
36"		120.0	135.0	120.0	135.0	65.0	75.0
39"		120.0	135.0	120.0	135.0	65.0	75.0
42"		90.0	90.0	100.0	100.0	65.0	75.0
45"		80.0	80.0	100.0	100.0	65.0	75.0
48"		80.0	80.0	100.0	100.0	–	–
51"		80.0	80.0	100.0	100.0	–	–
54"		80.0	80.0	80.0	80.0	–	–
57"		80.0	80.0	80.0	80.0	–	–
60"		80.0	80.0	80.0	80.0	–	–
63"		60.0	60.0	80.0	80.0	–	–
66"		60.0	60.0	80.0	80.0	–	–
69"		60.0	60.0	80.0	80.0	–	–
33"	115–1/2"	120.0	135.0	120.0	135.0	65.0	75.0
36"		120.0	135.0	120.0	135.0	65.0	75.0
39"		120.0	135.0	120.0	135.0	65.0	75.0
42"		80.0	80.0	100.0	100.0	65.0	75.0
45"		80.0	80.0	100.0	100.0	65.0	75.0
48"		80.0	80.0	100.0	100.0	–	–
51"		80.0	80.0	80.0	80.0	–	–
54"		80.0	80.0	80.0	80.0	–	–
57"		80.0	80.0	80.0	80.0	–	–
60"		60.0	60.0	80.0	80.0	–	–
63"		60.0	60.0	80.0	80.0	–	–
66"		60.0	60.0	80.0	80.0	–	–
69"		60.0	60.0	80.0	80.0	–	–

GLASS LOAD CAPACITY – PSF

NOMINAL DIMS.		GLASS TYPES					
		'A' & 'Ai'		'B' & 'Bi'		'C' & 'Ci'	
D.L.O. WIDTH	D.L.O. HEIGHT	EXT.(+)	INT.(–)	EXT.(+)	INT.(–)	EXT.(+)	INT.(–)
33"	121–1/2"	120.0	135.0	120.0	135.0	65.0	75.0
36"		120.0	135.0	120.0	135.0	65.0	75.0
39"		80.0	80.0	100.0	100.0	65.0	75.0
42"		80.0	80.0	100.0	100.0	65.0	75.0
45"		80.0	80.0	100.0	100.0	–	–
48"		80.0	80.0	80.0	80.0	–	–
51"		80.0	80.0	80.0	80.0	–	–
54"		80.0	80.0	80.0	80.0	–	–
57"		60.0	60.0	80.0	80.0	–	–
60"		60.0	60.0	80.0	80.0	–	–
63"		60.0	60.0	80.0	80.0	–	–
33"	127–1/2"	120.0	135.0	120.0	135.0	65.0	75.0
36"		90.0	90.0	100.0	100.0	65.0	75.0
39"		80.0	80.0	100.0	100.0	65.0	75.0
42"		80.0	80.0	100.0	100.0	–	–
45"		80.0	80.0	100.0	100.0	–	–
48"		80.0	80.0	80.0	80.0	–	–
51"		80.0	80.0	80.0	80.0	–	–
54"		60.0	60.0	80.0	80.0	–	–
57"		60.0	60.0	80.0	80.0	–	–
60"		60.0	60.0	80.0	80.0	–	–
33"	133–1/2"	120.0	135.0	120.0	135.0	65.0	75.0
36"		80.0	80.0	100.0	100.0	65.0	75.0
39"		80.0	80.0	100.0	100.0	–	–
42"		80.0	80.0	100.0	100.0	–	–
45"		80.0	80.0	80.0	80.0	–	–
48"		80.0	80.0	80.0	80.0	–	–
51"		60.0	60.0	80.0	80.0	–	–
54"		60.0	60.0	80.0	80.0	–	–
57"		60.0	60.0	80.0	80.0	–	–
33"	139–1/2"	90.0	90.0	100.0	100.0	65.0	75.0
36"		80.0	80.0	100.0	100.0	65.0	75.0
39"		80.0	80.0	100.0	100.0	–	–
42"		80.0	80.0	80.0	80.0	–	–
45"		80.0	80.0	80.0	80.0	–	–
48"		60.0	60.0	80.0	80.0	–	–
51"		60.0	60.0	80.0	80.0	–	–
54"		60.0	60.0	80.0	80.0	–	–
57"		60.0	60.0	80.0	80.0	–	–

INTERPOLATION BETWEEN WIDTHS OR HEIGHTS ALLOWED.

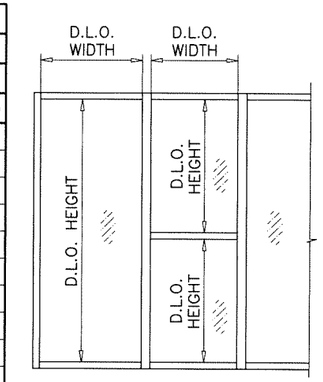

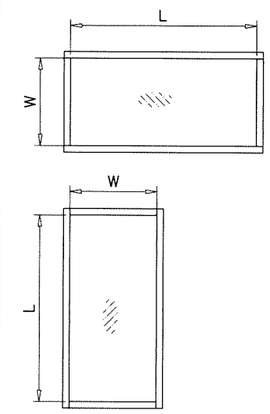

NOTE:
WIDTH AND LENGTH DIMENSIONS CAN BE ORIENTED VERTICALLY OR HORIZONTALLY AS SHOWN ABOVE.

GLASS
(LEVEL 'D' IMPACT)

Sealed: 8/19/2025

NOTE:
GLASS CAPACITIES ON THIS SHEET ARE BASED ON ASTM E1300–09 (3 SEC. GUSTS).

JALAL FAROOQ LICENSE No. 81223 STATE OF FLORIDA PROFESSIONAL ENGINEER

FL #19973

AL-FAROOQ CORPORATION
ENGINEERS & PRODUCT DEVELOPMENT
9360 SUNSET DRIVE, SUITE 220
MIAMI, FLORIDA 33173 (C.A.N. 3538)
TEL. (305) 264-8100 FAX. (305) 262-6978
COMP–ANL\21–51FAGP

SERIES FRONT SET ALUM WINDOWALL SYS. (L.M.I.)

Aldora Aluminum & Glass Products Inc.
4250 Coral Ridge Drive, Suite 101
Coral Springs, FL. 33065
Tel. (954) 784–6900 Fax. (954) 784–6901

revisions:

no	date	by	description

date: 06–10–21
scale: –
dr. by: TARIQ
chk. by:

drawing no. 21–51F

GLASS LOAD CAPACITY - PSF			
NOMINAL DIMS.		GLASS TYPE 'Di'	
D.L.O. WIDTH	D.L.O. HEIGHT	EXT.(+)	INT.(−)
33"	73−1/2"	65.0	65.0
36"		65.0	65.0
39"		65.0	65.0
42"		65.0	65.0
45"		65.0	65.0
48"		60.9	60.9
51"		57.4	57.4
54"		54.2	54.2
57"		51.3	51.3
60"		48.8	48.8
63"		46.4	46.4
66"		44.3	44.3
69"		42.4	42.4
33"	79−1/2"	65.0	65.0
36"		65.0	65.0
39"		65.0	65.0
42"		65.0	65.0
45"		65.0	65.0
48"		60.9	60.9
51"		57.4	57.4
54"		54.2	54.2
57"		51.3	51.3
60"		48.8	48.8
63"		46.4	46.4
33"	85−1/2"	65.0	65.0
36"		65.0	65.0
39"		65.0	65.0
42"		65.0	65.0
45"		65.0	65.0
48"		60.9	60.9
51"		57.4	57.4
54"		54.2	54.2
57"		51.3	51.3
60"		48.8	48.8
33"	91−1/2"	65.0	65.0
36"		65.0	65.0
39"		65.0	65.0
42"		65.0	65.0
45"		65.0	65.0
48"		60.9	60.9
51"		57.4	57.4
54"		54.2	54.2
33"	97−1/2"	65.0	65.0
36"		65.0	65.0
39"		65.0	65.0
42"		65.0	65.0
45"		65.0	65.0
48"		60.9	60.9
51"		57.4	57.4

GLASS LOAD CAPACITY - PSF			
NOMINAL DIMS.		GLASS TYPE 'Di'	
D.L.O. WIDTH	D.L.O. HEIGHT	EXT.(+)	INT.(−)
33"	103−1/2"	65.0	65.0
36"		65.0	65.0
39"		65.0	65.0
42"		65.0	65.0
45"		65.0	65.0
48"		60.9	60.9
33"	109−1/2"	65.0	65.0
36"		65.0	65.0
39"		65.0	65.0
42"		65.0	65.0
45"		65.0	65.0
33"	115−1/2"	65.0	65.0
36"		65.0	65.0
39"		65.0	65.0
42"		65.0	65.0
45"		65.0	65.0
33"	121−1/2"	65.0	65.0
36"		65.0	65.0
39"		65.0	65.0
42"		65.0	65.0
33"	127−1/2"	65.0	65.0
36"		65.0	65.0
39"		65.0	65.0
33"	133−1/2"	65.0	65.0
36"		65.0	65.0
33"	139−1/2"	65.0	65.0
36"		65.0	65.0

INTERPOLATION BETWEEN WIDTHS OR HEIGHTS ALLOWED.

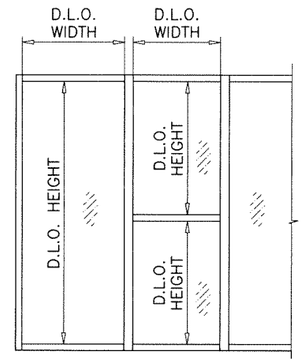

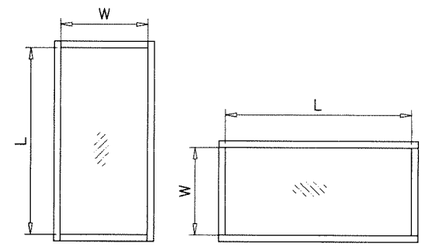

NOTE:
WIDTH AND LENGTH DIMENSIONS CAN BE ORIENTED VERTICALLY OR HORIZONTALLY AS SHOWN ABOVE.

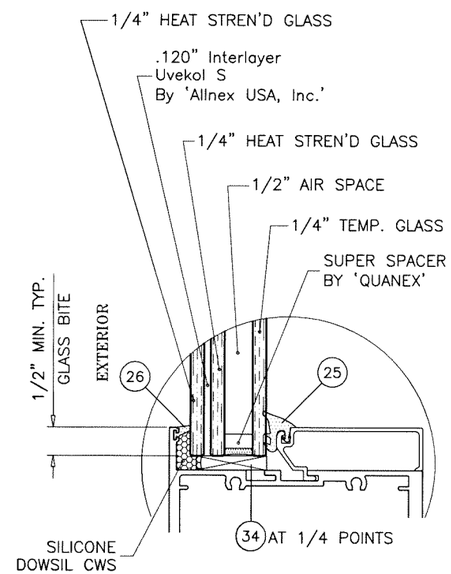

GLASS TYPE 'Di'

GLAZING DETAIL LEVEL 'D' IMPACT

GLASS
(LEVEL 'D' IMPACT)

Sealed: 8/19/2025

JALAL FAROOQ LICENSE No. 81223 STATE OF FLORIDA PROFESSIONAL ENGINEER

FL #19973

NOTE:
GLASS CAPACITIES ON THIS SHEET ARE BASED ON ASTM E1300−09 (3 SEC. GUSTS).

AL-FAROOQ CORPORATION
ENGINEERS & PRODUCT DEVELOPMENT
9360 SUNSET DRIVE, SUITE 220
MIAMI, FLORIDA 33173 (C.A.N. 3538)
TEL. (305) 264-8100 FAX. (305) 262-6978

COMP−ANL\21−51FAGP

SERIES FRONT SET ALUM WINDOWALL SYS. (L.M.I.)

Aldora Aluminum & Glass Products Inc.
4250 Coral Ridge Drive, Suite 101
Coral Springs, FL. 33065
Tel. (954) 784-6900 Fax. (954) 784-6901

revisions:

no	date	by	description

date: 06−10−21
scale: 3/8" = 1"
dr. by: TARIQ
chk. by:

drawing no. 21−51F

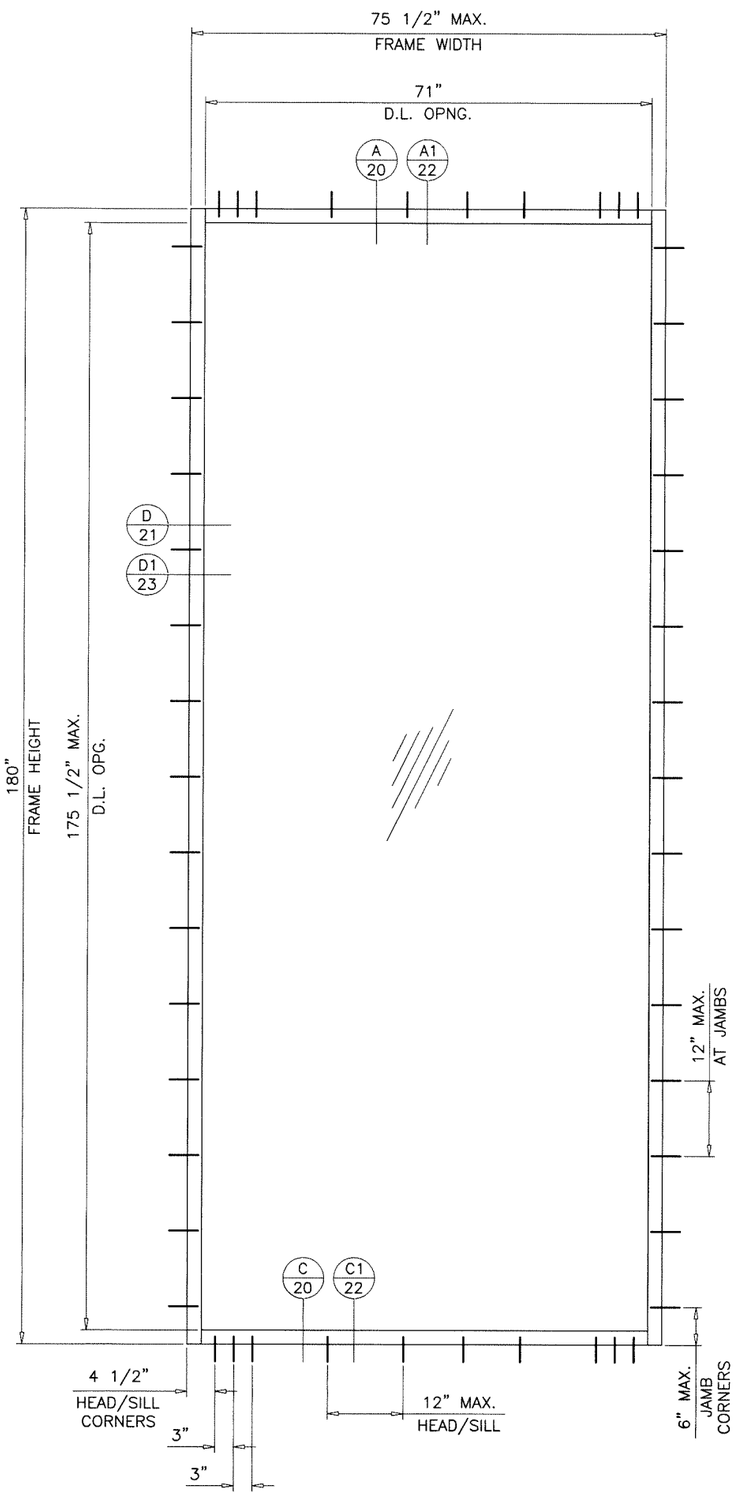

DESIGN LOAD CAPACITY – PSF			
NOMINAL DIMS.		GLASS TYPE 'G'	
FRAME WIDTH	FRAME HEIGHT	EXT.(+)	INT.(–)
75–1/2"	114"	70.0	70.0
76–1/2"		69.0	69.0
79–1/2"		66.3	66.3
82–1/2"		63.7	63.7
85–1/2"		61.4	61.4
88–1/2"		59.2	59.2
91–1/2"		57.1	57.1
94–1/2"		55.2	55.2
97–1/2"		53.4	53.4
100–1/2"		51.8	51.8
103–1/2"		50.2	50.2
106–1/2"		48.7	48.7
109–1/2"		47.3	47.3
112–1/2"		46.0	46.0
75–1/2"	120"	70.0	70.0
76–1/2"		69.0	69.0
79–1/2"		66.3	66.3
82–1/2"		63.7	63.7
85–1/2"		61.4	61.4
88–1/2"		59.2	59.2
91–1/2"		57.1	57.1
94–1/2"		55.2	55.2
97–1/2"		53.4	53.4
100–1/2"		51.8	51.8
103–1/2"		50.2	50.2
106–1/2"		48.7	48.7
109–1/2"		47.3	47.3
75–1/2"	126"	70.0	70.0
76–1/2"		69.0	69.0
79–1/2"		66.3	66.3
82–1/2"		63.7	63.7
85–1/2"		61.4	61.4
88–1/2"		59.2	59.2
91–1/2"		57.1	57.1
94–1/2"		55.2	55.2
97–1/2"		53.4	53.4
100–1/2"		51.8	51.8
103–1/2"		50.2	50.2
106–1/2"		48.7	48.7
75–1/2"	132"	70.0	70.0
76–1/2"		69.0	69.0
79–1/2"		66.3	66.3
82–1/2"		63.7	63.7
85–1/2"		61.4	61.4
88–1/2"		59.2	59.2
91–1/2"		57.1	57.1
94–1/2"		55.2	55.2
97–1/2"		53.4	53.4
100–1/2"		51.8	51.8

DESIGN LOAD CAPACITY – PSF			
NOMINAL DIMS.		GLASS TYPE 'G'	
FRAME WIDTH	FRAME HEIGHT	EXT.(+)	INT.(–)
75–1/2"	138"	70.0	70.0
76–1/2"		69.0	69.0
79–1/2"		66.3	66.3
82–1/2"		63.7	63.7
85–1/2"		61.4	61.4
88–1/2"		59.2	59.2
91–1/2"		57.1	57.1
94–1/2"		55.2	55.2
97–1/2"		53.4	53.4
75–1/2"	144"	70.0	70.0
76–1/2"		69.0	69.0
79–1/2"		66.3	66.3
82–1/2"		63.7	63.7
85–1/2"		61.4	61.4
88–1/2"		59.2	59.2
91–1/2"		57.1	57.1
75–1/2"	150"	70.0	70.0
76–1/2"		69.0	69.0
79–1/2"		66.3	66.3
82–1/2"		63.7	63.7
85–1/2"		61.4	61.4
88–1/2"		59.2	59.2
75–1/2"	156"	67.8	67.8
76–1/2"		67.0	67.0
79–1/2"		64.8	64.8
82–1/2"		63.2	63.2
85–1/2"		61.4	61.4
75–1/2"	162"	65.0	65.0
76–1/2"		64.2	64.2
79–1/2"		62.2	62.2
82–1/2"		60.8	60.8
75–1/2"	168"	62.4	62.4
76–1/2"		61.8	61.8
79–1/2"		60.2	60.2
75–1/2"	174"	60.3	60.3
76–1/2"		59.7	59.7
75–1/2"	180"	58.0	58.0

INTERPOLATION BETWEEN WIDTHS OR HEIGHTS ALLOWED.

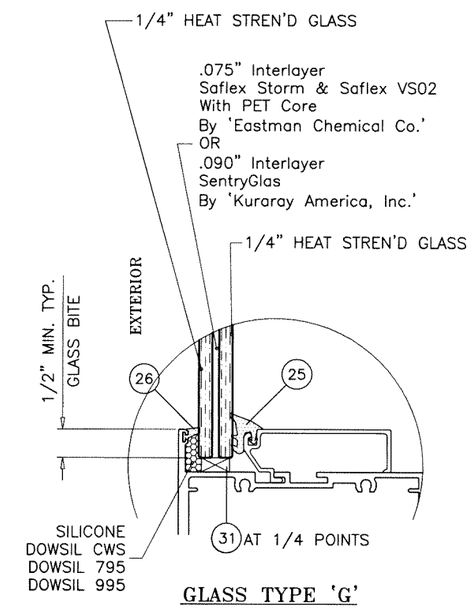

GLASS TYPE 'G'
(LEVEL 'D' IMPACT)

GLASS
(LEVEL 'D' IMPACT)

Sealed: 8/19/2025

JALAL FAROOQ
LICENSE
No. 81223
STATE OF FLORIDA
PROFESSIONAL ENGINEER

FL #19973

NOTE:
GLASS CAPACITIES ON THIS SHEET ARE BASED ON ASTM E1300–09 (3 SEC. GUSTS).

AL-FAROOQ CORPORATION
ENGINEERS & PRODUCT DEVELOPMENT
9360 SUNSET DRIVE, SUITE 220
MIAMI, FLORIDA 33173 (C.A.N. 3538)
TEL. (305) 264-8100 FAX. (305) 262-6978
COMP–ANL\21–51FAGP

SERIES FRONT SET ALUM WINDOWALL SYS. (L.M.I.)

Aldora Aluminum & Glass Products Inc.
4250 Coral Ridge Drive, Suite 101
Coral Springs, FL. 33065
Tel. (954) 784–6900 Fax. (954) 784–6901

revisions:			
no	date	by	description

date: 06–10–21
scale: 3/8" = 1"
dr. by: TARIQ
chk. by:

drawing no.
21–51F

GLASS LOAD CAPACITY - PSF					
NOMINAL DIMS.		GLASS TYPE 'E'		GLASS TYPE 'Ei'	
D.L.O. WIDTH	D.L.O. HEIGHT	EXT.(+)	INT.(−)	EXT.(+)	INT.(−)
45"	109−1/2"	100.0	100.0	100.0	100.0
48"		100.0	100.0	100.0	100.0
51"		100.0	100.0	100.0	100.0
54"		100.0	100.0	100.0	100.0
57"		100.0	100.0	100.0	100.0
60"		95.2	95.2	95.2	95.2
63"		90.9	90.9	90.9	90.9
66"		87.0	87.0	87.0	87.0
69"		83.3	83.3	83.3	83.3
45"	115−1/2"	100.0	100.0	100.0	100.0
48"		100.0	100.0	100.0	100.0
51"		100.0	100.0	100.0	100.0
54"		100.0	100.0	100.0	100.0
57"		100.0	100.0	100.0	100.0
60"		95.2	95.2	95.2	95.2
63"		90.9	90.9	90.9	90.9
66"		87.0	87.0	87.0	87.0
69"		83.3	83.3	83.3	83.3
45"	121−1/2"	100.0	100.0	100.0	100.0
48"		100.0	100.0	100.0	100.0
51"		100.0	100.0	100.0	100.0
54"		100.0	100.0	100.0	100.0
57"		100.0	100.0	100.0	100.0
60"		95.2	95.2	95.2	95.2
63"		90.9	90.9	90.9	90.9
45"	127−1/2"	100.0	100.0	100.0	100.0
48"		100.0	100.0	100.0	100.0
51"		100.0	100.0	100.0	100.0
54"		100.0	100.0	100.0	100.0
57"		98.2	98.2	100.0	100.0
60"		93.5	93.5	95.2	95.2
45"	133−1/2"	100.0	100.0	100.0	100.0
48"		100.0	100.0	100.0	100.0
51"		100.0	100.0	100.0	100.0
54"		100.0	100.0	100.0	100.0
57"		94.9	94.9	99.3	99.3
45"	139−1/2"	100.0	100.0	100.0	100.0
48"		100.0	100.0	100.0	100.0
51"		100.0	100.0	100.0	100.0
54"		97.5	97.5	100.0	100.0
57"		91.6	91.6	95.9	95.9

INTERPOLATION BETWEEN WIDTHS OR HEIGHTS ALLOWED.

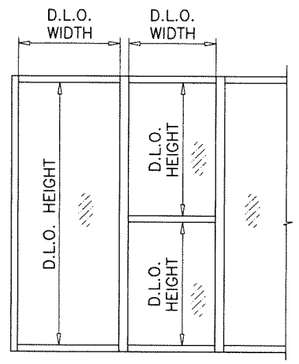

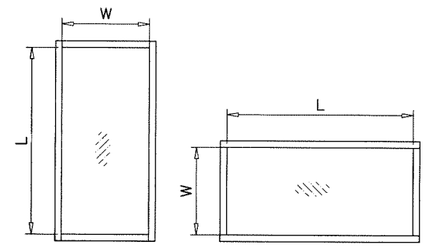

NOTE:
WIDTH AND LENGTH DIMENSIONS CAN BE ORIENTED VERTICALLY OR HORIZONTALLY AS SHOWN ABOVE.

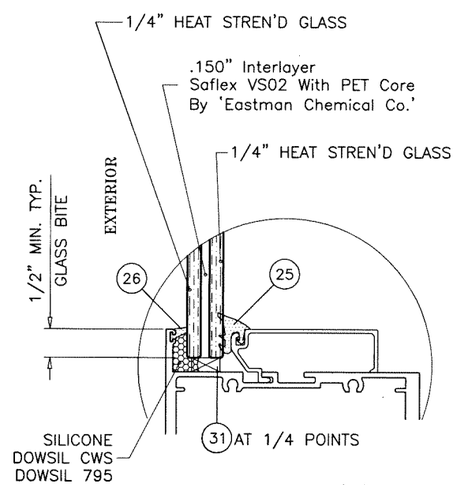

GLASS TYPE 'E'

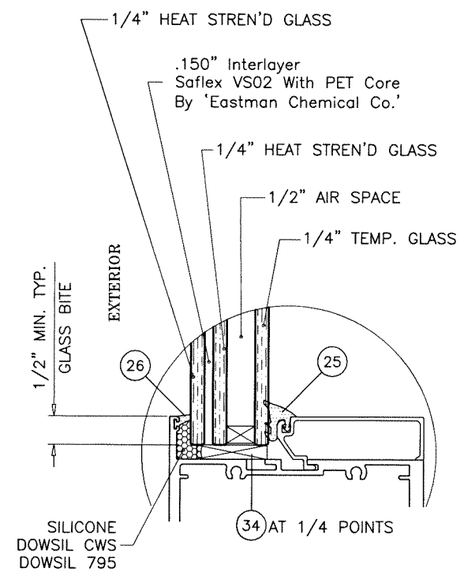

GLASS TYPE 'Ei'

GLAZING DETAILS LEVEL 'E' IMPACT

GLASS
(LEVEL 'E' IMPACT)

Sealed: 8/19/2025

NOTE:
GLASS CAPACITIES ON THIS SHEET ARE BASED ON ASTM E1300−09 (3 SEC. GUSTS).

FL #19973

JALAL FAROOQ
LICENSE
No. 81223
STATE OF FLORIDA
PROFESSIONAL ENGINEER

AL-FAROOQ CORPORATION
ENGINEERS & PRODUCT DEVELOPMENT
9360 SUNSET DRIVE, SUITE 220
MIAMI, FLORIDA 33173 (C.A.N. 3538)
TEL. (305) 264-8100 FAX. (305) 262-6978

COMP−ANL\21−51FAGP

SERIES FRONT SET ALUM WINDOWALL SYS. (L.M.I.)

Aldora Aluminum & Glass Products Inc.
4250 Coral Ridge Drive, Suite 101
Coral Springs, FL. 33065
Tel. (954) 784-6900 Fax. (954) 784-6901

revisions:

no	date	by	description

date: 06−10−21
scale: 3/8" = 1"
dr. by: TARIQ
chk. by:

drawing no. 21−51F

GLASS LOAD CAPACITY – PSF			
NOMINAL DIMS.		GLASS TYPES 'F' & 'Fi'	
D.L.O. WIDTH	D.L.O. HEIGHT	EXT.(+)	INT.(–)
45"	91–1/2"	100.0	100.0
48"		100.0	100.0
51"		100.0	100.0
54"		100.0	100.0
57"		100.0	100.0
60"		95.2	95.2
63"		90.9	90.9
66"		87.0	87.0
69"		83.3	83.3
45"	103–1/2"	100.0	100.0
48"		100.0	100.0
51"		100.0	100.0
54"		100.0	100.0
57"		100.0	100.0
60"		95.2	95.2
63"		90.9	90.9
45"	115–1/2"	100.0	100.0
48"		100.0	100.0
51"		100.0	100.0
54"		100.0	100.0
57"		100.0	100.0
45"	127–1/2"	100.0	100.0
48"		100.0	100.0
51"		100.0	100.0
45"	139–1/2"	100.0	100.0

INTERPOLATION BETWEEN WIDTHS OR HEIGHTS ALLOWED.

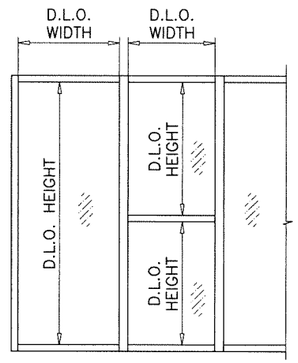

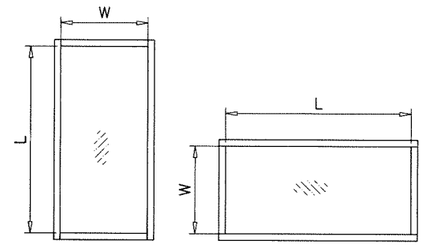

NOTE:
WIDTH AND LENGTH DIMENSIONS CAN BE ORIENTED VERTICALLY OR HORIZONTALLY AS SHOWN ABOVE.

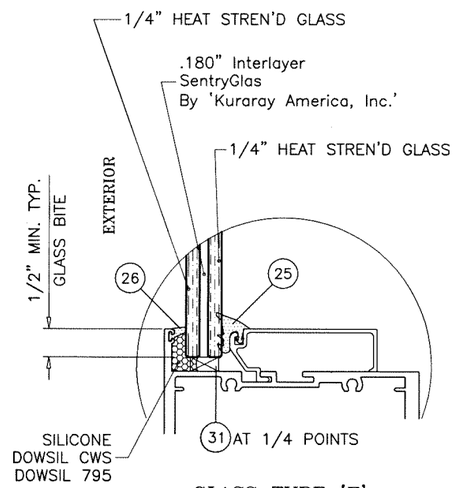

GLASS TYPE 'F'

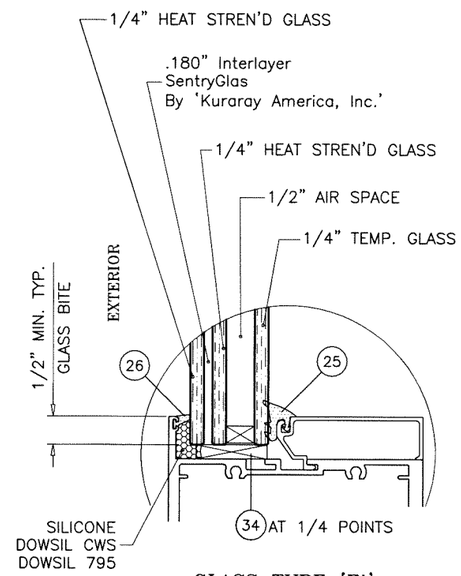

GLASS TYPE 'Fi'

GLAZING DETAILS LEVEL 'E' IMPACT

GLASS
(LEVEL 'E' IMPACT)

Sealed: 8/19/2025

JALAL FAROOQ
LICENSE
No. 81223
STATE OF FLORIDA
PROFESSIONAL ENGINEER

NOTE:
GLASS CAPACITIES ON THIS SHEET ARE BASED ON ASTM E1300–09 (3 SEC. GUSTS).

FL #19973

AL-FAROOQ CORPORATION
ENGINEERS & PRODUCT DEVELOPMENT
9360 SUNSET DRIVE, SUITE 220
MIAMI, FLORIDA 33173 (C.A.N. 3538)
TEL. (305) 264-8100 FAX. (305) 262-6978

COMP–ANL\21–51FAGP

SERIES FRONT SET ALUM WINDOWALL SYS. (L.M.I.)

Aldora Aluminum & Glass Products Inc.
4250 Coral Ridge Drive, Suite 101
Coral Springs, FL. 33065
Tel. (954) 784–6900 Fax. (954) 784–6901

revisions:			
no	date	by	description

date: 06–10–21
scale: 3/8" = 1"
dr. by: TARIQ
chk. by:

drawing no.
21–51F

DESIGN LOAD CAPACITY – PSF
NON-THERMAL MULLION
WITHOUT INTERMEDIATE HORIZONTALS

NOMINAL DIMS.		JAMBS 'J1'&'J5' MULLION 'M1'	
WIDTH (W)	FRAME HEIGHT	EXT.(+)	INT.(–)
30"	84"	90.0	90.0
36"		90.0	90.0
42"		90.0	90.0
48"		90.0	90.0
54"		90.0	90.0
60"		90.0	90.0
61"		90.0	90.0
66"		80.0	80.0
72"		80.0	80.0
30"	90"	90.0	90.0
36"		90.0	90.0
42"		90.0	90.0
48"		90.0	90.0
54"		90.0	90.0
57"		88.6	88.6
60"		80.0	80.0
66"		80.0	80.0
72"		77.3	77.3
30"	96"	90.0	90.0
36"		90.0	90.0
42"		90.0	90.0
48"		86.7	86.7
54"		78.9	78.9
60"		73.1	73.1
66"		68.6	68.6
72"		65.3	65.3
30"	102"	90.0	90.0
36"		90.0	90.0
42"		84.4	84.4
48"		75.4	75.4
50"		72.9	72.9
54"		68.5	68.5
60"		63.2	63.2
66"		59.0	59.0
70"		56.8	56.8
30"	108"	90.0	90.0
36"		80.9	80.9
42"		70.5	70.5
48"		62.9	62.9
54"		57.2	57.2
60"		52.8	52.8
66"		49.4	49.4
30"	114"	81.2	81.2
36"		68.5	68.5
42"		59.6	59.6
48"		53.1	53.1
54"		48.1	48.1
60"		44.3	44.3
63"		42.7	42.7
30"	120"	69.4	69.4
36"		58.5	58.5
42"		50.8	50.8
48"		45.2	45.2
54"		40.9	40.9
60"		37.5	37.5

INTERPOLATION BETWEEN WIDTHS OR HEIGHTS ALLOWED.

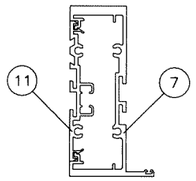

JAMB 'J1'
(LEVEL 'D' IMPACT)

Ix IN^4	Sx IN^3
5.684	2.521

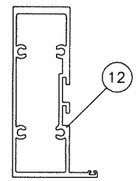

JAMB 'J5'
(LEVEL 'D' IMPACT)

Ix IN^4	Sx IN^3
4.027	1.788

FOR UNSECURED (UNANCHORED) JAMB 'J5'
LIMIT MAX. DESIGN LOAD TO ±65.0 PSF

NOTE:
JAMBS 'J1', 'J5' AND 'J3' MAY BE SECURED (ANCHORED) OR UNSECURED (UNANCHORED)
FOR SECURED JAMBS, USE ANCHOR SPACING SHOWN ON SHEET 1.
FOR UNSECURED JAMBS VERIFY MAX. GAPS ON SHEETS 21 OR 23.

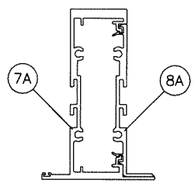

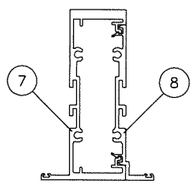

MULLION 'M1'
(LEVEL 'D' IMPACT)

Ix IN^4	Sx IN^3
5.670	2.514

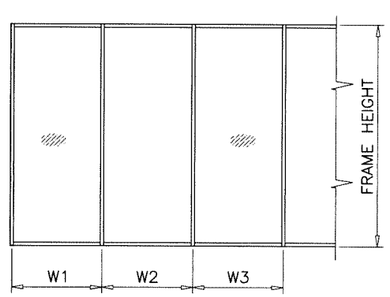

WIDTH (W) = W1
AT FRAME JAMB

WIDTH (W) = $\frac{W2 + W3}{2}$
AT FRAME MULLION

DESIGN LOAD CAPACITY – PSF
THERMAL MULLION
WITHOUT INTERMEDIATE HORIZONTALS

NOMINAL DIMS.		JAMB 'J3' MULLION 'M3'	
WIDTH (W)	FRAME HEIGHT	EXT.(+)	INT.(–)
30"	84"	90.0	90.0
36"		90.0	90.0
42"		90.0	90.0
48"		90.0	90.0
54"		90.0	90.0
60"		80.0	80.0
66"		80.0	80.0
72"		80.0	80.0
30"	90"	90.0	90.0
36"		90.0	90.0
42"		90.0	90.0
48"		90.0	90.0
51"		90.0	90.0
54"		80.0	80.0
60"		80.0	80.0
66"		80.0	80.0
72"		77.9	77.9
30"	96"	90.0	90.0
36"		90.0	90.0
42"		90.0	90.0
48"		87.3	87.3
54"		79.5	79.5
60"		73.6	73.6
66"		69.1	69.1
72"		65.7	65.7
30"	102"	80.0	80.0
36"		80.0	80.0
42"		80.0	80.0
48"		75.9	75.9
54"		68.9	68.9
60"		63.6	63.6
66"		59.4	59.4
70"		57.2	57.2
30"	108"	80.0	80.0
36"		80.0	80.0
42"		72.3	72.3
48"		64.5	64.5
54"		58.7	58.7
60"		54.2	54.2
66"		50.7	50.7
30"	114"	80.0	80.0
36"		70.2	70.2
42"		61.1	61.1
48"		54.4	54.4
54"		49.3	49.3
60"		45.4	45.4
63"		43.8	43.8
30"	120"	71.2	71.2
36"		60.0	60.0
42"		52.1	52.1
48"		46.3	46.3
54"		41.9	41.9
60"		38.5	38.5

INTERPOLATION BETWEEN WIDTHS OR HEIGHTS ALLOWED.

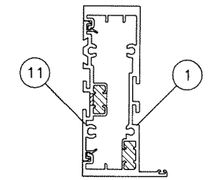

JAMB 'J3'
(LEVEL 'D' IMPACT)

Ix IN^4	Sx IN^3
5.813	2.538

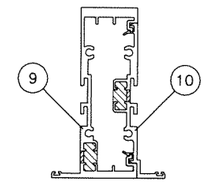

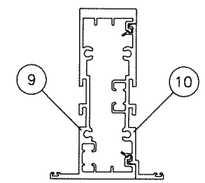

MULLION 'M3'
(LEVEL 'D' IMPACT)

Ix IN^4	Sx IN^3
5.813	2.529

JAMB & MULLIONS
(LEVEL 'D' IMPACT)
WITHOUT HORIZONTALS

Sealed: 8/19/2025

JALAL FAROOQ
LICENSE
No. 81223
STATE OF FLORIDA
PROFESSIONAL ENGINEER

FL #19973

AL-FAROOQ CORPORATION
ENGINEERS & PRODUCT DEVELOPMENT
9360 SUNSET DRIVE, SUITE 220
MIAMI, FLORIDA 33173
TEL. (305) 264-8100 FAX. (305) 262-6978
(C.A.N. 3538)

COMP-ANL\21-51FAGP

SERIES FRONT SET ALUM WINDOWALL SYS. (L.M.I.)

Aldora Aluminum & Glass Products Inc.
4250 Coral Ridge Drive, Suite 101
Coral Springs, FL. 33065
Tel. (954) 784-6900 Fax. (954) 784-6901

revisions:

no	date	by	description

date: 06-10-21
scale: –
dr. by: TARIQ
chk. by:

drawing no. 21-51F

DESIGN LOAD CAPACITY – PSF THERMAL MULLION WITHOUT INTERMEDIATE HORIZONTALS			
NOMINAL DIMS.		JAMB 'J4' MULLION 'M4'	
WIDTH (W)	FRAME HEIGHT	EXT.(+)	INT.(–)
30"	84"	100.0	100.0
36"		100.0	100.0
42"		100.0	100.0
48"		100.0	100.0
54"		100.0	100.0
60"		100.0	100.0
66"		60.0	60.0
72"		60.0	60.0
30"	90"	100.0	100.0
36"		100.0	100.0
42"		100.0	100.0
48"		100.0	100.0
54"		100.0	100.0
56"		100.0	100.0
60"		60.0	60.0
66"		60.0	60.0
72"		60.0	60.0
30"	96"	100.0	100.0
36"		100.0	100.0
42"		100.0	100.0
48"		100.0	100.0
52"		100.0	100.0
54"		60.0	60.0
60"		60.0	60.0
66"		60.0	60.0
72"		60.0	60.0
30"	102"	100.0	100.0
39"		100.0	100.0
42"		100.0	100.0
48"		100.0	100.0
49"		100.0	100.0
54"		60.0	60.0
60"		60.0	60.0
66"		60.0	60.0
72"		60.0	60.0
30"	108"	100.0	100.0
36"		100.0	100.0
42"		100.0	100.0
46"		99.2	99.2
48"		60.0	60.0
54"		60.0	60.0
60"		60.0	60.0
66"		60.0	60.0
72"		60.0	60.0
30"	114"	100.0	100.0
36"		100.0	100.0
42"		96.0	96.0
44"		92.0	92.0
48"		60.0	60.0
54"		60.0	60.0
60"		60.0	60.0
66"		60.0	60.0
72"		60.0	60.0

DESIGN LOAD CAPACITY – PSF THERMAL MULLION WITHOUT INTERMEDIATE HORIZONTALS			
NOMINAL DIMS.		JAMB 'J4' MULLION 'M4'	
WIDTH (W)	FRAME HEIGHT	EXT.(+)	INT.(–)
30"	120"	100.0	100.0
36"		99.5	99.5
42"		86.2	86.2
48"		60.0	60.0
54"		60.0	60.0
60"		60.0	60.0
66"		58.5	58.5
72"		54.8	54.8
30"	126"	60.0	60.0
36"		60.0	60.0
42"		60.0	60.0
48"		60.0	60.0
54"		60.0	60.0
60"		56.7	56.7
66"		52.5	52.5
72"		49.0	49.0
30"	132"	60.0	60.0
36"		60.0	60.0
42"		60.0	60.0
48"		60.0	60.0
54"		56.3	56.3
60"		51.3	51.3
65"		48.0	48.0
30"	138"	60.0	60.0
36"		60.0	60.0
42"		60.0	60.0
48"		57.0	57.0
54"		51.2	51.2
60"		46.7	46.7
62"		45.4	45.4
30"	144"	60.0	60.0
36"		60.0	60.0
42"		59.0	59.0
48"		52.2	52.2
54"		46.9	46.9
60"		42.6	42.6

INTERPOLATION BETWEEN WIDTHS OR HEIGHTS ALLOWED.

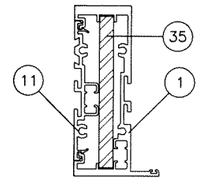

JAMB 'J4'
(LEVEL 'D' IMPACT)

	Ix IN^4	Sx IN^3
ALUMINUM	5.813	2.538
STEEL	2.000	1.000
TOTAL Ix ALUM + Ix STL X 2.9	11.613	

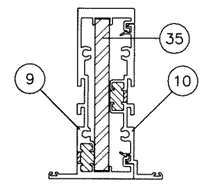

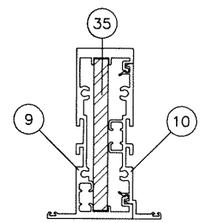

MULLION 'M4'
(LEVEL 'D' IMPACT)

	Ix IN^4	Sx IN^3
ALUMINUM	5.813	2.529
STEEL	2.000	1.000
TOTAL Ix ALUM + Ix STL X 2.9	11.613	

NOTE:
JAMB 'J4' MAY BE SECURED (ANCHORED) OR UNSECURED (UNANCHORED)
FOR SECURED JAMBS, USE ANCHOR SPACING SHOWN ON SHEET 1.
FOR UNSECURED JAMBS VERIFY MAX. GAPS ON SHEETS 21 OR 23.

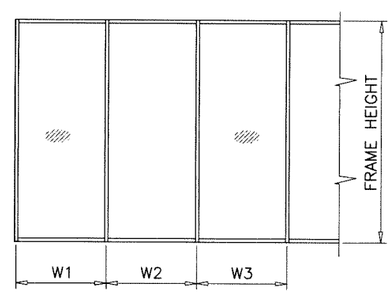

WIDTH (W) = W1
AT FRAME JAMB

WIDTH (W) = $\frac{W2 + W3}{2}$
AT FRAME MULLION

JAMB & MULLIONS
(LEVEL 'D' IMPACT)
WITHOUT HORIZONTALS

Sealed: 8/19/2025

JALAL FAROOQ
LICENSE
No. 81223
STATE OF FLORIDA
PROFESSIONAL ENGINEER

FL #19973

AL-FAROOQ CORPORATION
ENGINEERS & PRODUCT DEVELOPMENT
9360 SUNSET DRIVE, SUITE 220
MIAMI, FLORIDA 33173 (C.A.N. 3538)
TEL. (305) 264-8100 FAX. (305) 262-6978

COMP-ANL\21-51FAGP

SERIES FRONT SET ALUM WINDOWALL SYS. (L.M.I.)

Aldora Aluminum & Glass Products Inc.
4250 Coral Ridge Drive, Suite 101
Coral Springs, FL. 33065
Tel. (954) 784-6900 Fax. (954) 784-6901

revisions:

no	date	by	description

date: 06-10-21
scale: –
dr. by: TARIQ
chk. by:

drawing no. 21–51F

DESIGN LOAD CAPACITY – PSF NON-THERMAL MULLION WITHOUT INTERMEDIATE HORIZONTALS			
NOMINAL DIMS.		JAMB 'J5' MULLION 'M1'	
WIDTH (W)	FRAME HEIGHT	EXT.(+)	INT.(–)
30"	84"	90.0	90.0
36"		90.0	90.0
42"		90.0	90.0
48"		90.0	90.0
54"		90.0	90.0
57"		90.0	90.0
30"	90"	90.0	90.0
36"		90.0	90.0
42"		90.0	90.0
48"		90.0	90.0
53–1/2"		90.0	90.0

INTERPOLATION BETWEEN WIDTHS OR HEIGHTS ALLOWED.

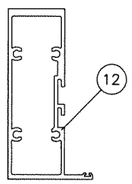

JAMB 'J5'
(LEVEL 'D' & 'E' IMPACT)

Ix IN^4	Sx IN^3
4.027	1.788

NOTE:
JAMB 'J5' MAY BE SECURED (ANCHORED) OR UNSECURED (UNANCHORED)
FOR SECURED JAMBS, USE ANCHOR SPACING SHOWN ON SHEET 1.
FOR UNSECURED JAMBS VERIFY MAX. GAPS ON SHEETS 21 OR 23.

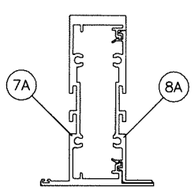

MULLION 'M1'
(LEVEL 'D' & 'E' IMPACT)

Ix IN^4	Sx IN^3
5.670	2.514

WITHOUT INTERMEDIATE HORIZONTALS

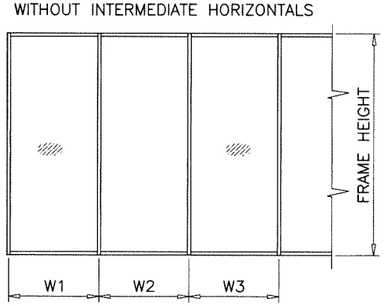

WIDTH (W) = W1
AT FRAME JAMB

WIDTH (W) = $\frac{W2 + W3}{2}$
AT FRAME MULLION

DESIGN LOAD CAPACITY – PSF NON-THERMAL MULLION WITHOUT INTERMEDIATE HORIZONTALS			
NOMINAL DIMS.		JAMB 'J2'/'J2A' MULLION 'M2'	
WIDTH (W)	FRAME HEIGHT	EXT.(+)	INT.(–)
30"	84"	120.0	135.0
36"		120.0	135.0
42"		120.0	135.0
48"		120.0	135.0
54"		120.0	135.0
60"		120.0	135.0
66"		100.0	100.0
72"		100.0	100.0
30"	90"	120.0	135.0
36"		120.0	135.0
42"		120.0	135.0
48"		120.0	135.0
54"		120.0	135.0
56"		120.0	135.0
60"		100.0	100.0
66"		100.0	100.0
72"		100.0	100.0
30"	96"	120.0	135.0
36"		120.0	135.0
42"		120.0	135.0
48"		120.0	135.0
52"		120.0	135.0
54"		100.0	100.0
60"		100.0	100.0
66"		100.0	100.0
72"		100.0	100.0
30"	102"	120.0	135.0
39"		120.0	135.0
42"		120.0	135.0
48"		120.0	135.0
49"		120.0	135.0
54"		100.0	100.0
60"		100.0	100.0
66"		100.0	100.0
72"		100.0	100.0
30"	108"	120.0	135.0
36"		120.0	135.0
42"		120.0	135.0
46"		120.0	135.0
48"		100.0	100.0
54"		100.0	100.0
60"		100.0	100.0
66"		100.0	100.0
72"		100.0	100.0
30"	114"	120.0	135.0
36"		120.0	135.0
42"		120.0	135.0
44"		120.0	135.0
48"		100.0	100.0
54"		100.0	100.0
60"		100.0	100.0
66"		96.8	96.8
72"		90.9	90.9

DESIGN LOAD CAPACITY – PSF NON-THERMAL MULLION WITHOUT INTERMEDIATE HORIZONTALS			
NOMINAL DIMS.		JAMB 'J2'/'J2A' MULLION 'M2'	
WIDTH (W)	FRAME HEIGHT	EXT.(+)	INT.(–)
30"	120"	120.0	135.0
36"		120.0	135.0
42"		120.0	128.0
48"		100.0	100.0
54"		100.0	100.0
60"		93.1	93.1
66"		86.3	86.3
72"		80.8	80.8
30"	126"	100.0	100.0
36"		100.0	100.0
42"		100.0	100.0
48"		100.0	100.0
54"		91.6	91.6
60"		83.7	83.7
66"		77.4	77.4
68"		75.6	75.6
30"	132"	100.0	100.0
36"		100.0	100.0
42"		100.0	100.0
48"		92.3	92.3
54"		83.0	83.0
60"		75.7	75.7
65"		70.8	70.8
30"	138"	100.0	100.0
36"		100.0	100.0
42"		95.3	95.3
48"		84.1	84.1
54"		75.6	75.6
60"		68.9	68.9
62"		67.0	67.0
30"	144"	100.0	100.0
36"		100.0	100.0
42"		87.1	87.1
48"		77.0	77.0
54"		69.1	69.1
60"		62.9	62.9

INTERPOLATION BETWEEN WIDTHS OR HEIGHTS ALLOWED.

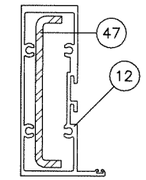

JAMB 'J2'
(LEVEL 'D' & 'E' IMPACT)

	Ix IN^4	Sx IN^3
ALUMINUM	4.027	1.788
STEEL	1.566	.783
TOTAL Ix ALUM + Ix STL X 2.9	8.523	

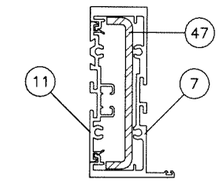

JAMB 'J2A'
(LEVEL 'D' & 'E' IMPACT)

	Ix IN^4	Sx IN^3
ALUMINUM	5.684	2.521
STEEL	1.566	.783
TOTAL Ix ALUM + Ix STL X 2.9	10.180	

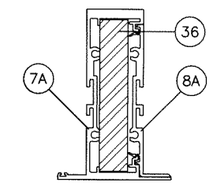

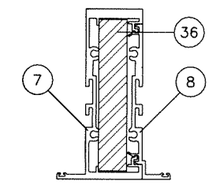

MULLION 'M2'
(LEVEL 'D' & 'E' IMPACT)

	Ix IN^4	Sx IN^3
ALUMINUM	5.670	2.514
STEEL	4.000	2.000
TOTAL Ix ALUM + Ix STL X 2.9	17.270	

NOTE:
JAMBS 'J2' AND 'J2A' MAY BE SECURED (ANCHORED) OR UNSECURED (UNANCHORED)
FOR SECURED JAMBS, USE ANCHOR SPACING SHOWN ON SHEET 1.
FOR UNSECURED JAMBS VERIFY MAX. GAPS ON SHEETS 21 OR 23.

JAMB & MULLIONS
(LEVEL 'D' & 'E' IMPACT)
WITHOUT HORIZONTALS

Sealed: 8/19/2025

JALAL FAROOQ
LICENSE
No. 81223
STATE OF FLORIDA
PROFESSIONAL ENGINEER

FL #19973

AL-FAROOQ CORPORATION
ENGINEERS & PRODUCT DEVELOPMENT
9360 SUNSET DRIVE, SUITE 220
MIAMI, FLORIDA 33173
TEL. (305) 264-8100 FAX. (305) 262-6978
(C.A.N. 3538)

COMP–ANL\21–51FAGP

SERIES FRONT SET ALUM WINDOWALL SYS. (L.M.I.)

Aldora Aluminum & Glass Products Inc.
4250 Coral Ridge Drive, Suite 101
Coral Springs, FL. 33065
Tel. (954) 784-6900 Fax. (954) 784-6901

revisions:

no	date	by	description

date: 06–10–21
scale: –
dr. by: TARIQ
chk. by:

drawing no. 21–51F

DESIGN LOAD CAPACITY – PSF
NON-THERMAL MULLION
WITH INTERMEDIATE HORIZONTALS

NOMINAL DIMS.		JAMBS 'J1'&'J5' MULLION 'M1'	
WIDTH (W)	FRAME HEIGHT	EXT.(+)	INT.(–)
30"	84"	90.0	90.0
36"		90.0	90.0
42"		90.0	90.0
48"		90.0	90.0
54"		90.0	90.0
60"		84.5	84.5
61"		83.1	83.1
66"		76.8	76.8
72"		70.4	70.4
30"	90"	90.0	90.0
36"		90.0	90.0
42"		90.0	90.0
48"		90.0	90.0
54"		81.2	81.2
57"		76.9	76.9
60"		73.0	73.0
66"		66.4	66.4
72"		60.9	60.9
30"	96"	90.0	90.0
36"		90.0	90.0
42"		91.0	91.0
48"		79.6	79.6
54"		70.8	70.8
60"		63.7	63.7
66"		57.9	57.9
72"		53.1	53.1
30"	102"	90.0	90.0
36"		90.0	90.0
42"		78.9	78.9
48"		69.1	69.1
50"		66.3	66.3
54"		61.4	61.4
60"		55.3	55.3
66"		50.2	50.2
70"		47.4	47.4
30"	108"	90.0	90.0
36"		77.6	77.6
42"		66.5	66.5
48"		58.2	58.2
54"		51.7	51.7
60"		46.6	46.6
66"		42.3	42.3
30"	114"	79.2	79.2
36"		66.0	66.0
42"		56.5	56.5
48"		49.5	49.5
54"		44.0	44.0
60"		39.6	39.6
63"		37.7	37.7
30"	120"	67.9	67.9
36"		56.6	56.6
42"		48.5	48.5
48"		42.4	42.4
54"		37.7	37.7
60"		33.9	33.9

INTERPOLATION BETWEEN WIDTHS OR HEIGHTS ALLOWED.

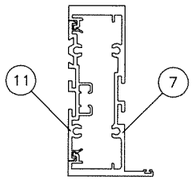

JAMB 'J1'
(LEVEL 'D' IMPACT)

Ix IN^4	Sx IN^3
5.684	2.521

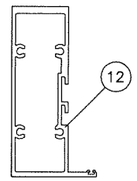

JAMB 'J5'
(LEVEL 'D' IMPACT)

Ix IN^4	Sx IN^3
4.027	1.788

FOR UNSECURED (UNANCHORED) JAMB 'J5'
LIMIT MAX. DESIGN LOAD TO ±65.0 PSF

NOTE:
JAMBS 'J1', 'J5' AND 'J3' MAY BE SECURED (ANCHORED) OR UNSECURED (UNANCHORED)
FOR SECURED JAMBS, USE ANCHOR SPACING SHOWN ON SHEET 1.
FOR UNSECURED JAMBS VERIFY MAX. GAPS ON SHEETS 21 OR 23.

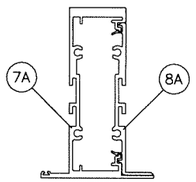

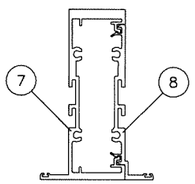

MULLION 'M1'
(LEVEL 'D' IMPACT)

Ix IN^4	Sx IN^3
5.670	2.514

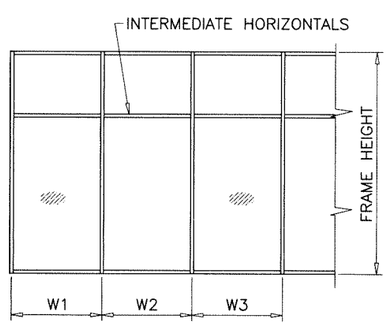

WIDTH (W) = W1
AT FRAME JAMB

WIDTH (W) = $\frac{W2 + W3}{2}$
AT FRAME MULLION

DESIGN LOAD CAPACITY – PSF
THERMAL MULLION
WITH INTERMEDIATE HORIZONTALS

NOMINAL DIMS.		JAMB 'J3' MULLION 'M3'	
WIDTH (W)	FRAME HEIGHT	EXT.(+)	INT.(–)
30"	84"	90.0	90.0
36"		90.0	90.0
42"		90.0	90.0
48"		90.0	90.0
54"		90.0	90.0
60"		85.1	85.1
66"		77.3	77.3
72"		70.9	70.9
30"	90"	90.0	90.0
36"		90.0	90.0
42"		90.0	90.0
48"		90.0	90.0
51"		86.5	86.5
54"		81.7	81.7
60"		73.5	73.5
66"		66.8	66.8
72"		61.3	61.3
30"	96"	90.0	90.0
36"		90.0	90.0
42"		90.0	90.0
48"		80.2	80.2
54"		71.2	71.2
60"		64.1	64.1
66"		58.3	58.3
72"		53.4	53.4
30"	102"	80.0	80.0
36"		80.0	80.0
42"		80.0	80.0
48"		70.5	70.5
54"		62.6	62.6
60"		56.4	56.4
66"		51.2	51.2
70"		48.3	48.3
30"	108"	80.0	80.0
36"		79.5	79.5
42"		68.2	68.2
48"		59.7	59.7
54"		53.0	53.0
60"		47.7	47.7
66"		43.4	43.4
30"	114"	80.0	80.0
36"		67.6	67.6
42"		58.0	58.0
48"		50.7	50.7
54"		45.1	45.1
60"		40.6	40.6
63"		38.6	38.6
30"	120"	69.6	69.6
36"		58.0	58.0
42"		49.7	49.7
48"		43.5	43.5
54"		38.7	38.7
60"		34.8	34.8

INTERPOLATION BETWEEN WIDTHS OR HEIGHTS ALLOWED.

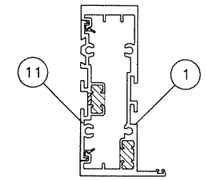

JAMB 'J3'
(LEVEL 'D' IMPACT)

Ix IN^4	Sx IN^3
5.813	2.538

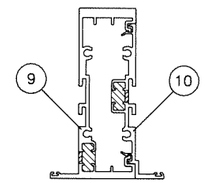

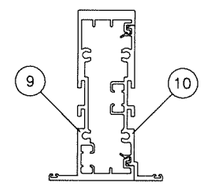

MULLION 'M3'
(LEVEL 'D' IMPACT)

Ix IN^4	Sx IN^3
5.813	2.529

JAMB & MULLIONS
(LEVEL 'D' IMPACT)
WITH HORIZONTALS

Sealed: 8/19/2025

JALAL FAROOQ
LICENSE
No. 81223
STATE OF FLORIDA
PROFESSIONAL ENGINEER

FL #19973

AL-FAROOQ CORPORATION
ENGINEERS & PRODUCT DEVELOPMENT
9360 SUNSET DRIVE, SUITE 220
MIAMI, FLORIDA 33173 (C.A.N. 3538)
TEL. (305) 264-8100 FAX. (305) 262-6978

COMP-ANL\21-51FAGP

SERIES FRONT SET ALUM WINDOWALL SYS. (L.M.I.)

Aldora Aluminum & Glass Products Inc.
4250 Coral Ridge Drive, Suite 101
Coral Springs, FL. 33065
Tel. (954) 784-6901 Fax. (954) 784-6900

revisions:			
no	date	by	description

date: 06-10-21
scale: –
dr. by: TARIQ
chk. by:

drawing no. 21–51F

DESIGN LOAD CAPACITY – PSF THERMAL MULLION WITH INTERMEDIATE HORIZONTALS			
NOMINAL DIMS.		JAMB 'J4' MULLION 'M4'	
WIDTH (W)	FRAME HEIGHT	EXT.(+)	INT.(–)
30"	84"	100.0	100.0
36"		100.0	100.0
42"		100.0	100.0
48"		100.0	100.0
54"		100.0	100.0
60"		100.0	100.0
66"		60.0	60.0
72"		60.0	60.0
30"	90"	100.0	100.0
36"		100.0	100.0
42"		100.0	100.0
48"		100.0	100.0
54"		100.0	100.0
56"		100.0	100.0
60"		60.0	60.0
66"		60.0	60.0
72"		60.0	60.0
30"	96"	100.0	100.0
36"		100.0	100.0
42"		100.0	100.0
48"		100.0	100.0
52"		100.0	100.0
54"		60.0	60.0
60"		60.0	60.0
66"		60.0	60.0
72"		60.0	60.0
30"	102"	100.0	100.0
39"		100.0	100.0
42"		100.0	100.0
48"		100.0	100.0
49"		98.2	98.2
54"		60.0	60.0
60"		60.0	60.0
66"		60.0	60.0
72"		60.0	60.0
30"	108"	100.0	100.0
36"		100.0	100.0
42"		100.0	100.0
46"		93.3	93.3
48"		60.0	60.0
54"		60.0	60.0
60"		60.0	60.0
66"		60.0	60.0
72"		59.6	59.6
30"	114"	100.0	100.0
36"		100.0	100.0
42"		91.7	91.7
44"		87.6	87.6
48"		60.0	60.0
54"		60.0	60.0
60"		60.0	60.0
66"		58.4	58.4
72"		53.5	53.5

DESIGN LOAD CAPACITY – PSF THERMAL MULLION WITH INTERMEDIATE HORIZONTALS			
NOMINAL DIMS.		JAMB 'J4' MULLION 'M4'	
WIDTH (W)	FRAME HEIGHT	EXT.(+)	INT.(–)
30"	120"	100.0	100.0
36"		96.6	96.6
42"		82.8	82.8
48"		60.0	60.0
54"		60.0	60.0
60"		58.0	58.0
66"		52.7	52.7
72"		48.3	48.3
30"	126"	60.0	60.0
36"		60.0	60.0
42"		60.0	60.0
48"		60.0	60.0
54"		58.4	58.4
60"		52.6	52.6
66"		47.8	47.8
72"		46.4	46.4
30"	132"	60.0	60.0
36"		60.0	60.0
42"		60.0	60.0
48"		59.9	59.9
54"		53.2	53.2
60"		47.9	47.9
65"		44.2	44.2
30"	138"	60.0	60.0
36"		60.0	60.0
42"		60.0	60.0
48"		54.8	54.8
54"		48.7	48.7
60"		43.8	43.8
62"		42.4	42.4
30"	144"	60.0	60.0
36"		60.0	60.0
42"		57.2	57.2
48"		50.0	50.0
54"		44.5	44.5
60"		40.0	40.0

INTERPOLATION BETWEEN WIDTHS OR HEIGHTS ALLOWED.

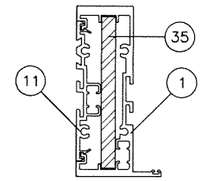

JAMB 'J4'
(LEVEL 'D' IMPACT)

	Ix IN^4	Sx IN^3
ALUMINUM	5.813	2.538
STEEL	2.000	1.000
TOTAL Ix ALUM + Ix STL X 2.9	11.613	

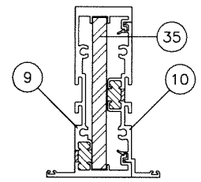

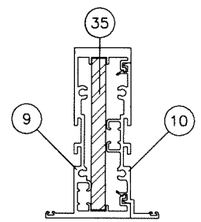

MULLION 'M4'
(LEVEL 'D' IMPACT)

	Ix IN^4	Sx IN^3
ALUMINUM	5.813	2.529
STEEL	2.000	1.000
TOTAL Ix ALUM + Ix STL X 2.9	11.613	

NOTE:
JAMB 'J4' MAY BE SECURED (ANCHORED) OR UNSECURED (UNANCHORED)
FOR SECURED JAMBS, USE ANCHOR SPACING SHOWN ON SHEET 1.
FOR UNSECURED JAMBS VERIFY MAX. GAPS ON SHEETS 21 OR 23.

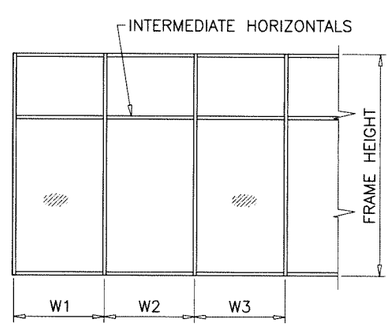

WIDTH (W) = W1
AT FRAME JAMB

WIDTH (W) = $\frac{W2 + W3}{2}$
AT FRAME MULLION

JAMB & MULLIONS
(LEVEL 'D' IMPACT)
WITH HORIZONTALS

Sealed: 8/19/2025

JALAL FAROOQ LICENSE No. 81223 STATE OF FLORIDA PROFESSIONAL ENGINEER

FL #19973

AL-FAROOQ CORPORATION
ENGINEERS & PRODUCT DEVELOPMENT
9360 SUNSET DRIVE, SUITE 220
MIAMI, FLORIDA 33173 (C.A.N. 3538)
TEL. (305) 264-8100 FAX. (305) 262-6978

COMP-ANL\21-51FAGP

SERIES FRONT SET ALUM WINDOWALL SYS. (L.M.I.)

Aldora Aluminum & Glass Products Inc.
4250 Coral Ridge Drive, Suite 101
Coral Springs, FL. 33065
Tel. (954) 784-6900 Fax. (954) 784-6901

revisions:

no	date	by	description

date: 06-10-21
scale: –
dr. by: TARIQ
chk. by:

drawing no. 21-51F

DESIGN LOAD CAPACITY – PSF NON-THERMAL MULLION WITH OR WITHOUT HORIZONTALS			
NOMINAL DIMS.		MULLION 'M5'	
WIDTH (W)	FRAME HEIGHT	EXT.(+)	INT.(–)
30"	84"	65.0	65.0
36"		65.0	65.0
42"		65.0	65.0
48"		65.0	65.0
54"		65.0	65.0
60"		65.0	65.0
66"		65.0	65.0
30"	90"	65.0	65.0
36"		65.0	65.0
42"		65.0	65.0
48"		65.0	65.0
54"		65.0	65.0
60"		65.0	65.0
30"	96"	65.0	65.0
36"		65.0	65.0
42"		65.0	65.0
48"		65.0	65.0
54"		65.0	65.0
60"		65.0	65.0
30"	102"	65.0	65.0
36"		65.0	65.0
42"		65.0	65.0
48"		65.0	65.0
54"		65.0	65.0
30"	108"	65.0	65.0
36"		65.0	65.0
42"		65.0	65.0
48"		65.0	65.0
30"	114"	65.0	65.0
36"		65.0	65.0
42"		65.0	65.0
48"		65.0	65.0
30"	120"	65.0	65.0
36"		65.0	65.0
42"		65.0	65.0
48"		65.0	65.0

INTERPOLATION BETWEEN WIDTHS OR HEIGHTS ALLOWED.

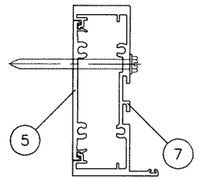

ANCHORED JAMBS ONLY.

USE ANCHOR SPACING SHOWN ON SHEET 1.

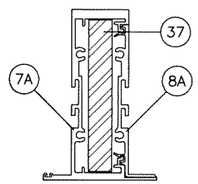

MULLION 'M5'
(LEVEL 'D' IMPACT)

	Ix IN^4	Sx IN^3
ALUMINUM	5.670	2.514
STEEL	3.3333	1.6667
TOTAL Ix ALUM + Ix STL X 2.9	15.2409	

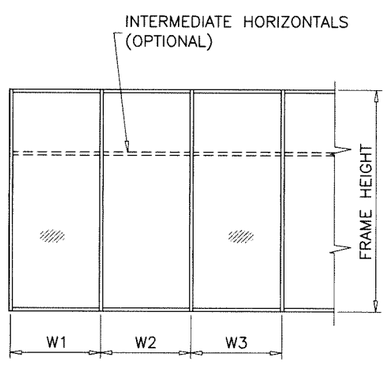

WIDTH (W) = W1
AT FRAME JAMB

WIDTH (W) = $\frac{W2 + W3}{2}$
AT FRAME MULLION

MULLION
(LEVEL 'D' IMPACT)
WITH OR WITHOUT HORIZONTALS

Sealed: 8/19/2025

JALAL FAROOQ
LICENSE
No. 81223
STATE OF FLORIDA
PROFESSIONAL ENGINEER

FL #19973

AL-FAROOQ CORPORATION
ENGINEERS & PRODUCT DEVELOPMENT
9360 SUNSET DRIVE, SUITE 220
MIAMI, FLORIDA 33173 (C.A.N. 3538)
TEL. (305) 264-8100 FAX. (305) 262-6978

COMP-ANL\21-51FAGP

SERIES FRONT SET ALUM WINDOWALL SYS. (L.M.I.)

Aldora Aluminum & Glass Products Inc.
4250 Coral Ridge Drive, Suite 101
Coral Springs, FL. 33065
Tel. (954) 784-6900 Fax. (954) 784-6901

revisions:

no	date	by	description

date: 06-10-21
scale: –
dr. by: TARIQ
chk. by:

drawing no.
21-51F

DESIGN LOAD CAPACITY – PSF NON-THERMAL MULLION WITH INTERMEDIATE HORIZONTALS			
NOMINAL DIMS.		JAMB 'J5' MULLION 'M1'	
WIDTH (W)	FRAME HEIGHT	EXT.(+)	INT.(–)
30"	84"	90.0	90.0
36"		90.0	90.0
42"		90.0	90.0
48"		90.0	90.0
53–1/2"		90.0	90.0
30"	90"	90.0	90.0
36"		90.0	90.0
42"		90.0	90.0
48"		90.0	90.0
53–1/2"		81.2	81.2

INTERPOLATION BETWEEN WIDTHS OR HEIGHTS ALLOWED.

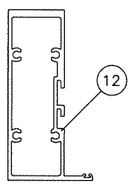

JAMB 'J5'
(LEVEL 'D' & 'E' IMPACT)

Ix IN^4	Sx IN^3
4.027	1.788

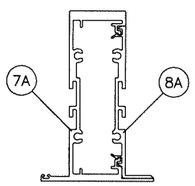

MULLION 'M1'
(LEVEL 'D' & 'E' IMPACT)

Ix IN^4	Sx IN^3
5.670	2.514

NOTE:
JAMB 'J5' MAY BE SECURED (ANCHORED) OR UNSECURED (UNANCHORED)
FOR SECURED JAMBS, USE ANCHOR SPACING SHOWN ON SHEET 1.
FOR UNSECURED JAMBS VERIFY MAX. GAPS ON SHEETS 21 OR 23.

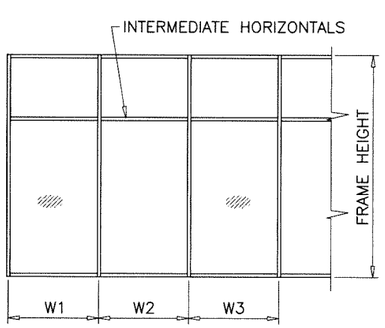

WIDTH (W) = W1
AT FRAME JAMB

WIDTH (W) = $\frac{W2 + W3}{2}$
AT FRAME MULLION

DESIGN LOAD CAPACITY – PSF NON-THERMAL MULLION WITH INTERMEDIATE HORIZONTALS			
NOMINAL DIMS.		JAMB 'J2'/'J2A' MULLION 'M2'	
WIDTH (W)	FRAME HEIGHT	EXT.(+)	INT.(–)
30"	84"	120.0	135.0
36"		120.0	135.0
42"		120.0	135.0
48"		120.0	135.0
54"		120.0	135.0
60"		120.0	135.0
66"		100.0	100.0
72"		100.0	100.0
30"	90"	120.0	135.0
36"		120.0	135.0
42"		120.0	135.0
48"		120.0	135.0
54"		120.0	135.0
56"		120.0	135.0
60"		100.0	100.0
66"		100.0	100.0
72"		100.0	100.0
30"	96"	120.0	135.0
36"		120.0	135.0
42"		120.0	135.0
48"		120.0	135.0
52"		120.0	135.0
54"		100.0	100.0
60"		100.0	100.0
66"		100.0	100.0
72"		100.0	100.0
30"	102"	120.0	135.0
39"		120.0	135.0
42"		120.0	135.0
48"		120.0	135.0
49"		120.0	135.0
54"		100.0	100.0
60"		100.0	100.0
66"		100.0	100.0
72"		98.6	98.6
30"	108"	120.0	135.0
36"		120.0	135.0
42"		120.0	135.0
46"		120.0	135.0
48"		100.0	100.0
54"		100.0	100.0
60"		100.0	100.0
66"		96.0	96.0
72"		88.0	88.0
30"	114"	120.0	135.0
36"		120.0	135.0
42"		120.0	135.0
44"		120.0	130.0
48"		100.0	100.0
54"		100.0	100.0
60"		94.7	94.7
66"		86.1	86.1
72"		79.0	79.0

DESIGN LOAD CAPACITY – PSF NON-THERMAL MULLION WITH INTERMEDIATE HORIZONTALS			
NOMINAL DIMS.		JAMB 'J2'/'J2A' MULLION 'M2'	
WIDTH (W)	FRAME HEIGHT	EXT.(+)	INT.(–)
30"	120"	120.0	135.0
36"		120.0	135.0
42"		120.0	122.9
48"		100.0	100.0
54"		95.0	95.0
60"		85.5	85.5
66"		77.7	77.7
72"		71.3	71.3
30"	126"	100.0	100.0
36"		100.0	100.0
42"		100.0	100.0
48"		97.0	97.0
54"		86.2	86.2
60"		77.6	77.6
66"		70.5	70.5
68"		68.4	68.4
30"	132"	100.0	100.0
36"		100.0	100.0
42"		100.0	100.0
48"		88.3	88.3
54"		78.5	78.5
60"		70.7	70.7
65"		65.2	65.2
30"	138"	100.0	100.0
36"		100.0	100.0
42"		92.4	92.4
48"		80.8	80.8
54"		71.8	71.8
60"		64.7	64.7
62"		62.6	62.6
30"	144"	100.0	100.0
36"		98.4	98.4
42"		84.4	84.4
48"		73.8	73.8
54"		65.6	65.6
60"		59.1	59.1

INTERPOLATION BETWEEN WIDTHS OR HEIGHTS ALLOWED.

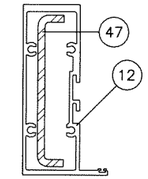

JAMB 'J2'
(LEVEL 'D' & 'E' IMPACT)

	Ix IN^4	Sx IN^3
ALUMINUM	4.027	1.788
STEEL	1.566	.783
TOTAL Ix ALUM + Ix STL X 2.9	8.523	

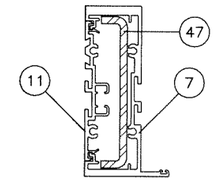

JAMB 'J2A'
(LEVEL 'D' & 'E' IMPACT)

	Ix IN^4	Sx IN^3
ALUMINUM	5.684	2.521
STEEL	1.566	.783
TOTAL Ix ALUM + Ix STL X 2.9	10.180	

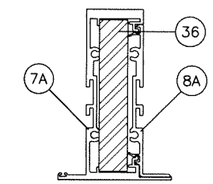

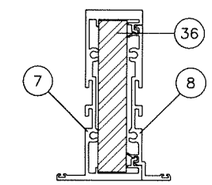

MULLION 'M2'
(LEVEL 'D' & 'E' IMPACT)

	Ix IN^4	Sx IN^3
ALUMINUM	5.670	2.514
STEEL	4.000	2.000
TOTAL Ix ALUM + Ix STL X 2.9	17.270	

NOTE:
JAMBS 'J2' AND 'J2A' MAY BE SECURED (ANCHORED) OR UNSECURED (UNANCHORED)
FOR SECURED JAMBS, USE ANCHOR SPACING SHOWN ON SHEET 1.
FOR UNSECURED JAMBS VERIFY MAX. GAPS ON SHEETS 21 OR 23.

JAMB & MULLIONS
(LEVEL 'D' & 'E' IMPACT)
WITH HORIZONTALS

Sealed: 8/19/2025

JALAL FAROOQ LICENSE No. 81223 STATE OF FLORIDA PROFESSIONAL ENGINEER

FL #19973

AL-FAROOQ CORPORATION
ENGINEERS & PRODUCT DEVELOPMENT
9360 SUNSET DRIVE, SUITE 220
MIAMI, FLORIDA 33173 (C.A.N. 3538)
TEL. (305) 264-8100 FAX. (305) 262-6978

COMP–ANL\21–51FAGP

SERIES FRONT SET ALUM WINDOWALL SYS. (L.M.I.)

Aldora Aluminum & Glass Products Inc.
4250 Coral Ridge Drive, Suite 101
Coral Springs, FL. 33065
Tel. (954) 784–6900 Fax. (954) 784–6901

revisions:

no	date	by	description

date: 06–10–21
scale: –
dr. by: TARIQ
chk. by:

drawing no. 21–51F

WOOD BUCKS AND METAL STRUCTURE NOT BY 'ALDORA' MUST SUSTAIN LOADS IMPOSED BY GLAZING SYSTEM AND TRANSFER THEM TO THE BUILDING STRUCTURE.

TYPICAL ANCHORS: SEE ELEV. FOR SPACING

TYPE 'AW'– 1/4" DIA. ULTRACON+ BY 'DEWALT' (Fu=164 KSI, Fy=148 KSI)
INTO 2BY WOOD BUCKS OR WOOD STRUCTURES
WITH 1–1/2" MIN. PENETRATION INTO WOOD

THRU 1BY WOOD BUCKS INTO CONCRETE OR BLOCKS
WITH 1–1/2" MIN. EMBED INTO CONCRETE (HEAD/SILL/JAMBS)
WITH 1–1/4" MIN. EMBED INTO BLOCKS (JAMBS)

TYPE 'AC'– 1/4" DIA. ULTRACON+ BY 'DEWALT' (Fu=164 KSI, Fy=148 KSI)
DIRECTLY INTO CONCRETE OR BLOCKS
WITH 1–3/4" MIN. EMBED INTO CONCRETE (HEAD/SILL/JAMBS)
WITH 1–3/4" MIN. EMBED INTO GROUT FILLED BLOCKS (JAMBS)

ANCHOR EDGE DISTANCES
INTO CONCRETE AND BLOCKS = 2–1/2" MIN.
INTO WOOD STRUCTURE = 1" MIN.

TYPE 'BW'– 5/16" DIA ULTRACON BY 'DEWALT' (Fu=177 KSI, Fy=155 KSI)
INTO 2BY WOOD BUCKS OR WOOD STRUCTURES
WITH 1–1/2" MIN. PENETRATION INTO WOOD

THRU 1BY WOOD BUCKS INTO CONCRETE OR BLOCKS
WITH 1–1/2" MIN. EMBED INTO CONCRETE (HEAD/SILL/JAMBS)
WITH 1–1/4" MIN. EMBED INTO BLOCKS (JAMBS)

TYPE 'BC'– 5/16" DIA ULTRACON BY 'DEWALT' (Fu=177 KSI, Fy=155 KSI)
DIRECTLY INTO CONCRETE OR BLOCKS
WITH 1–3/4" MIN. EMBED INTO CONCRETE (HEAD/SILL/JAMBS)
WITH 1–3/4" MIN. EMBED INTO GROUT FILLED BLOCKS (JAMBS)

ANCHOR EDGE DISTANCES
INTO CONCRETE AND BLOCKS = 3–1/8" MIN.
INTO WOOD STRUCTURE = 1–1/2" MIN.

TYPE 'CM'– #14 SELF DRILLING SCREWS ST/ST (GRADE 5 CRS)
INTO F.B.C. APPROVED MULLIONS
OR
INTO METAL STRUCTURES (HEAD/SILL/JAMBS)
(3) THREADS MIN. PENETRATION BEYOND SUBSTRATE
ALUMINUM: 1/8" THK. MIN. (6063–T5 MIN.)
STEEL: 1/8" THK. MIN. (Fy = 36 KSI MIN.)
(STEEL IN CONTACT WITH ALUMINUM TO BE PLATED OR PAINTED)

ANCHOR EDGE DISTANCES
INTO METAL STRUCTURE = 1/2" MIN.

WOOD AT HEAD, SILL OR JAMBS SG = 0.55 MIN.
CONCRETE AT HEAD, SILL OR JAMBS f'c = 3000 PSI MIN.
C–90 HOLLOW/FILLED BLOCK AT JAMBS f'm = 2000 PSI MIN.

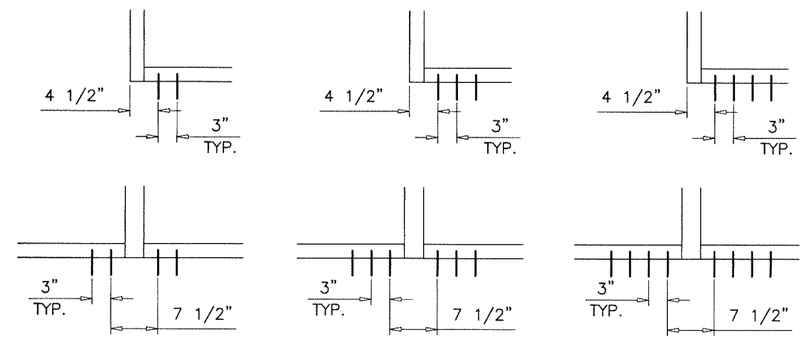

AW2, AC2, BW2, BC2, CM2 | AW3, AC3, BW3, BC3, CM3 | AW4, AC4, BW4, CM4

ANCHORS TYPES:

AW2 = (2) ANCHORS TYPE 'AW' AT EACH SIDE OF JAMB AND MULLION
AC2 = (2) ANCHORS TYPE 'AC' AT EACH SIDE OF JAMB AND MULLION
BW2 = (2) ANCHORS TYPE 'BW' AT EACH SIDE OF JAMB AND MULLION
BC2 = (2) ANCHORS TYPE 'BC' AT EACH SIDE OF JAMB AND MULLION
CM2 = (2) ANCHORS TYPE 'CM' AT EACH SIDE OF JAMB AND MULLION

AW3 = (3) ANCHORS TYPE 'AW' AT EACH SIDE OF JAMB AND MULLION
AC3 = (3) ANCHORS TYPE 'AC' AT EACH SIDE OF JAMB AND MULLION
BW3 = (3) ANCHORS TYPE 'BW' AT EACH SIDE OF JAMB AND MULLION
BC3 = (3) ANCHORS TYPE 'BC' AT EACH SIDE OF JAMB AND MULLION
CM3 = (3) ANCHORS TYPE 'CM' AT EACH SIDE OF JAMB AND MULLION

AW4 = (4) ANCHORS TYPE 'AW' AT EACH SIDE OF JAMB AND MULLION
AC4 = (4) ANCHORS TYPE 'AC' AT EACH SIDE OF JAMB AND MULLION
BW4 = (4) ANCHORS TYPE 'BW' AT EACH SIDE OF JAMB AND MULLION
CM4 = (4) ANCHORS TYPE 'CM' AT EACH SIDE OF JAMB AND MULLION

Sealed: 8/19/2025

SEE SHEETS 12 & 16 FOR ANCHOR CAPACITIES.

JALAL FAROOQ LICENSE No. 81223 STATE OF FLORIDA PROFESSIONAL ENGINEER

ANCHORS

FL #19973

AL-FAROOQ CORPORATION
ENGINEERS & PRODUCT DEVELOPMENT
9360 SUNSET DRIVE, SUITE 220
MIAMI, FLORIDA 33173 (C.A.N. 3538)
TEL. (305) 264-8100 FAX. (305) 262-6978

COMP–ANL\21–51FAGP

SERIES FRONT SET ALUM WINDOWALL SYS. (L.M.I.)

Aldora Aluminum & Glass Products Inc.
4250 Coral Ridge Drive, Suite 101
Coral Springs, FL. 33065
Tel. (954) 784–6900 Fax. (954) 784–6901

revisions:

no	date	by	description

date: 06–10–21
scale: –
dr. by: TARIQ
chk. by:

drawing no. 21–51F

ANCHOR LOAD CAPACITY – PSF (1/4" MAX. SHIMS)
EXT.(+) & INT.(–)

NOMINAL DIMS.		ANCHORS TYPE 'AW'			ANCHORS TYPE 'BW'			ANCHORS TYPE 'AC'			ANCHORS TYPE 'BC'			ANCHORS TYPE 'CM'		
WIDTH (W)	FRAME HEIGHT	AW2	AW3	AW4	BW2	BW3	BW4	AC2	AC3	AC4	BC2	BC3	BC4	CM2	CM3	CM4
30"	96"	123.3	135.0	135.0	135.0	135.0	135.0	135.0	135.0	135.0	135.0	135.0	135.0	135.0	135.0	135.0
36"		106.7	135.0	135.0	135.0	135.0	135.0	135.0	135.0	135.0	135.0	135.0	135.0	135.0	135.0	135.0
42"		95.1	135.0	135.0	125.1	135.0	135.0	124.3	135.0	135.0	135.0	135.0	135.0	135.0	135.0	135.0
48"		86.7	130.0	135.0	114.0	135.0	135.0	113.3	135.0	135.0	135.0	135.0	135.0	127.7	135.0	135.0
52"		82.3	123.4	135.0	108.2	135.0	135.0	107.6	135.0	135.0	134.2	135.0	135.0	121.2	135.0	135.0
54"		80.4	120.6	135.0	105.7	135.0	135.0	105.1	135.0	135.0	131.1	135.0	135.0	118.4	135.0	135.0
60"		75.6	113.5	135.0	99.5	135.0	135.0	98.9	135.0	135.0	123.3	135.0	135.0	111.4	135.0	135.0
66"		72.0	108.1	135.0	94.8	135.0	135.0	94.2	135.0	135.0	117.5	135.0	135.0	106.1	135.0	135.0
72"		69.3	104.0	135.0	91.2	135.0	135.0	90.7	135.0	135.0	113.1	135.0	135.0	102.1	135.0	135.0
30"	102"	114.8	135.0	135.0	135.0	135.0	135.0	135.0	135.0	135.0	135.0	135.0	135.0	135.0	135.0	135.0
36"		99.0	135.0	135.0	130.3	135.0	135.0	129.5	135.0	135.0	135.0	135.0	135.0	135.0	135.0	135.0
42"		88.0	132.1	135.0	115.8	135.0	135.0	115.1	135.0	135.0	135.0	135.0	135.0	129.7	135.0	135.0
48"		80.0	120.0	135.0	105.2	135.0	135.0	104.6	135.0	135.0	130.5	135.0	135.0	117.8	135.0	135.0
52"		75.8	113.7	135.0	99.7	135.0	135.0	99.1	135.0	135.0	123.6	135.0	135.0	111.6	135.0	135.0
54"		74.0	110.9	135.0	97.3	135.0	135.0	96.7	135.0	135.0	120.6	135.0	135.0	108.9	135.0	135.0
60"		69.3	104.0	135.0	91.2	135.0	135.0	90.7	135.0	135.0	113.1	135.0	135.0	102.1	135.0	135.0
66"		65.8	98.7	131.5	86.5	129.8	135.0	86.0	129.0	135.0	107.3	135.0	135.0	96.9	135.0	135.0
72"		63.0	94.5	126.1	82.9	124.4	135.0	82.4	123.6	135.0	102.8	135.0	135.0	92.8	135.0	135.0
30"	108"	107.4	135.0	135.0	135.0	135.0	135.0	135.0	135.0	135.0	135.0	135.0	135.0	135.0	135.0	135.0
36"		92.4	135.0	135.0	121.6	135.0	135.0	120.9	135.0	135.0	135.0	135.0	135.0	135.0	135.0	135.0
42"		82.0	123.0	135.0	107.8	135.0	135.0	107.2	135.0	135.0	133.7	135.0	135.0	120.7	135.0	135.0
48"		74.3	111.4	135.0	97.7	135.0	135.0	97.1	135.0	135.0	121.1	135.0	135.0	109.4	135.0	135.0
52"		70.2	105.4	135.0	92.4	135.0	135.0	91.9	135.0	135.0	114.6	135.0	135.0	103.5	135.0	135.0
54"		68.5	102.7	135.0	90.1	135.0	135.0	89.5	134.3	135.0	111.7	135.0	135.0	100.9	135.0	135.0
60"		64.0	96.0	128.0	84.2	126.3	135.0	83.7	125.5	135.0	104.4	135.0	135.0	94.3	135.0	135.0
66"		60.5	90.8	121.0	79.6	119.4	135.0	79.1	118.7	135.0	98.7	135.0	135.0	89.1	133.7	135.0
72"		57.8	86.7	115.6	76.0	114.0	135.0	75.6	113.3	135.0	94.2	135.0	135.0	85.1	127.7	135.0
30"	114"	100.8	135.0	135.0	132.7	135.0	135.0	131.9	135.0	135.0	135.0	135.0	135.0	135.0	135.0	135.0
36"		86.7	130.0	135.0	114.0	135.0	135.0	113.3	135.0	135.0	135.0	135.0	135.0	127.7	135.0	135.0
42"		76.7	115.0	135.0	100.9	135.0	135.0	100.3	135.0	135.0	125.1	135.0	135.0	113.0	135.0	135.0
48"		69.3	104.0	135.0	91.2	135.0	135.0	90.7	135.0	135.0	113.1	135.0	135.0	102.1	135.0	135.0
52"		65.5	98.2	130.9	86.1	129.1	135.0	85.6	128.4	135.0	106.7	135.0	135.0	96.4	135.0	135.0
54"		63.8	95.6	127.5	83.9	125.8	135.0	83.4	125.1	135.0	104.0	135.0	135.0	93.9	135.0	135.0
60"		59.4	89.1	118.9	78.2	117.3	135.0	77.7	116.6	135.0	96.9	135.0	135.0	87.5	131.3	135.0
66"		56.0	84.0	112.1	73.7	110.5	135.0	73.3	109.9	135.0	91.4	135.0	135.0	82.5	123.8	135.0
72"		53.3	80.0	106.7	70.2	105.2	135.0	69.7	104.6	135.0	87.0	130.5	135.0	78.6	117.8	135.0
30"	120"	95.1	135.0	135.0	125.1	135.0	135.0	124.3	135.0	135.0	135.0	135.0	135.0	135.0	135.0	135.0
36"		81.6	122.4	135.0	107.3	135.0	135.0	106.7	135.0	135.0	133.0	135.0	135.0	120.2	135.0	135.0
42"		72.0	108.1	135.0	94.8	135.0	135.0	94.2	135.0	135.0	117.5	135.0	135.0	106.1	135.0	135.0
48"		65.0	97.5	130.0	85.5	128.3	135.0	85.0	127.5	135.0	106.0	135.0	135.0	95.8	135.0	135.0
52"		61.3	91.9	122.6	80.6	120.9	135.0	80.1	120.2	135.0	99.9	135.0	135.0	90.3	135.0	135.0
54"		59.6	89.5	119.3	78.5	117.7	135.0	78.0	117.0	135.0	97.3	135.0	135.0	87.9	131.8	135.0
60"		55.5	83.2	110.9	73.0	109.4	135.0	72.5	108.8	135.0	90.5	135.0	135.0	81.7	122.6	135.0
66"		52.2	78.2	104.3	68.6	102.9	135.0	68.2	102.3	135.0	85.1	127.6	135.0	76.8	115.3	135.0
72"		49.5	74.3	99.0	65.1	97.7	130.3	64.8	97.1	129.5	80.8	121.1	135.0	73.0	109.4	135.0
30"	126"	89.9	134.9	135.0	118.3	135.0	135.0	117.6	135.0	135.0	135.0	135.0	135.0	132.5	135.0	135.0
36"		77.0	115.6	135.0	101.3	135.0	135.0	100.7	135.0	135.0	125.6	135.0	135.0	113.5	135.0	135.0
42"		67.9	101.9	135.0	89.3	134.0	135.0	88.8	133.2	135.0	110.8	135.0	135.0	100.0	135.0	135.0
48"		61.2	91.8	122.4	80.5	120.7	135.0	80.0	120.0	135.0	99.8	135.0	135.0	90.1	135.0	135.0
52"		57.6	86.4	115.2	75.8	113.6	135.0	75.3	113.0	135.0	93.9	135.0	135.0	84.8	127.3	135.0
54"		56.0	84.0	112.1	73.7	110.5	135.0	73.3	109.9	135.0	91.4	135.0	135.0	82.5	123.8	135.0
60"		52.0	78.0	104.0	68.4	102.6	135.0	68.0	102.0	135.0	84.8	127.2	135.0	76.6	114.9	135.0
66"		48.8	73.2	97.6	64.2	96.3	128.4	63.8	95.7	127.6	79.6	119.4	135.0	71.9	107.8	135.0

ANCHOR LOAD CAPACITY – PSF (1/4" MAX. SHIMS)
EXT.(+) & INT.(–)

NOMINAL DIMS.		ANCHORS TYPE 'AW'			ANCHORS TYPE 'BW'			ANCHORS TYPE 'AC'			ANCHORS TYPE 'BC'			ANCHORS TYPE 'CM'		
WIDTH (W)	FRAME HEIGHT	AW2	AW3	AW4	BW2	BW3	BW4	AC2	AC3	AC4	BC2	BC3	BC4	CM2	CM3	CM4
30"	132"	85.3	128.0	135.0	112.2	135.0	135.0	111.6	135.0	135.0	135.0	135.0	135.0	125.7	135.0	135.0
36"		73.0	109.5	135.0	96.0	135.0	135.0	95.4	135.0	135.0	119.0	135.0	135.0	107.5	135.0	135.0
42"		64.2	96.4	128.5	84.5	126.8	135.0	84.0	126.0	135.0	104.8	135.0	135.0	94.6	135.0	135.0
48"		57.8	86.7	115.6	76.0	114.0	135.0	75.6	113.3	135.0	94.2	135.0	135.0	85.1	127.7	135.0
52"		54.3	81.5	108.7	71.5	107.2	135.0	71.1	106.6	135.0	88.6	132.9	135.0	80.0	120.1	135.0
54"		52.8	79.2	105.7	69.5	104.2	135.0	69.1	103.6	135.0	86.1	129.2	135.0	77.8	116.7	135.0
60"		48.9	73.4	97.9	64.4	96.6	128.8	64.0	96.0	128.0	79.8	119.7	135.0	72.1	108.1	135.0
30"	138"	81.2	121.8	135.0	106.8	135.0	135.0	106.1	135.0	135.0	132.4	135.0	135.0	119.6	135.0	135.0
36"		69.3	104.0	135.0	91.2	135.0	135.0	90.7	135.0	135.0	113.1	135.0	135.0	102.1	135.0	135.0
42"		61.0	91.4	121.9	80.2	120.3	135.0	79.7	119.6	135.0	99.4	135.0	135.0	89.8	134.7	135.0
48"		54.7	82.1	109.5	72.0	108.0	135.0	71.6	107.4	135.0	89.3	133.9	135.0	80.6	120.9	135.0
52"		51.4	77.1	102.9	67.6	101.5	135.0	67.3	100.9	134.5	83.9	125.8	135.0	75.8	113.6	135.0
54"		50.0	75.0	99.9	65.7	98.6	131.5	65.3	98.0	130.7	81.5	122.2	135.0	73.6	110.4	135.0
60"		46.2	69.3	92.4	60.8	91.2	121.6	60.4	90.7	120.9	75.4	113.1	135.0	68.1	102.1	135.0
30"	144"	77.4	116.1	135.0	101.8	135.0	135.0	101.2	135.0	135.0	126.2	135.0	135.0	114.0	135.0	135.0
36"		66.0	99.0	132.1	86.9	130.3	135.0	86.3	129.5	135.0	107.7	135.0	135.0	97.3	135.0	135.0
42"		58.0	87.0	116.0	76.3	114.4	135.0	75.8	113.7	135.0	94.6	135.0	135.0	85.4	128.1	135.0
48"		52.0	78.0	104.0	68.4	102.6	135.0	68.0	102.0	135.0	84.8	127.2	135.0	76.6	114.9	135.0
52"		48.8	73.2	97.6	64.2	96.3	128.4	63.8	95.7	127.7	79.6	119.4	135.0	71.9	107.9	135.0
54"		47.4	71.1	94.8	62.4	93.5	124.7	62.0	93.0	124.0	77.3	116.0	135.0	69.8	104.8	135.0
60"		43.8	65.7	87.6	57.6	86.4	115.2	57.3	85.9	114.5	71.4	107.1	135.0	64.5	96.8	129.0

INTERPOLATION BETWEEN WIDTHS OR HEIGHTS ALLOWED.

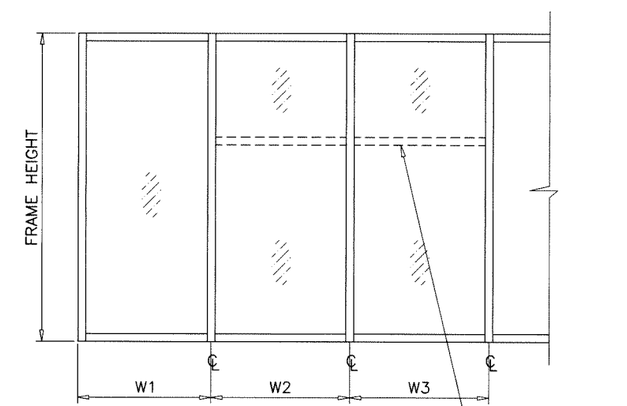

WIDTH (W) = W1
AT FRAME JAMB

WIDTH (W) = $\frac{W2 + W3}{2}$
AT FRAME MULLION

SEE SHEET 12 FOR ANCHOR TYPES.

Sealed: 8/19/2025

JALAL FAROOQ
LICENSE
No. 81223
STATE OF FLORIDA
PROFESSIONAL ENGINEER

FL #19973

HEAD/SILL ANCHORS

AL-FAROOQ CORPORATION
ENGINEERS & PRODUCT DEVELOPMENT
9360 SUNSET DRIVE, SUITE 220
MIAMI, FLORIDA 33173 (C.A.N. 3538)
TEL. (305) 264-8100 FAX. (305) 262-6978

COMP–ANL\21–51FAGP

SERIES FRONT SET ALUM WINDOWALL SYS. (L.M.I.)

Aldora Aluminum & Glass Products Inc.
4250 Coral Ridge Drive, Suite 101
Coral Springs, FL. 33065
Tel. (954) 784-6900 Fax. (954) 784-6901

revisions:

no	date	by	description

date: 06-10-21
scale: –
dr. by: TARIQ
chk. by:

drawing no. 21–51F

ANCHOR LOAD CAPACITY – PSF (3/8" MAX. SHIMS)
EXT.(+) & INT.(–)

NOMINAL DIMS.		ANCHORS TYPE 'BW'			ANCHORS TYPE 'BC'			ANCHORS TYPE 'CM'		
WIDTH (W)	FRAME HEIGHT	BW2	BW3	BW4	BC2	BC3	BC4	CM2	CM3	CM4
30"	96"	123.7	135.0	135.0	123.7	135.0	135.0	88.3	132.5	135.0
36"		107.1	135.0	135.0	107.1	135.0	135.0	76.4	114.7	135.0
42"		95.5	135.0	135.0	95.5	135.0	135.0	68.1	102.2	135.0
48"		87.0	130.5	135.0	87.0	130.5	135.0	62.1	93.2	124.2
52"		82.6	123.9	135.0	82.6	123.9	135.0	58.9	88.5	117.9
54"		80.7	121.0	135.0	80.7	121.0	135.0	57.6	86.4	115.2
60"		75.9	113.9	135.0	75.9	113.9	135.0	54.2	81.3	108.4
66"		72.3	108.5	135.0	72.3	108.5	135.0	51.6	77.4	103.2
72"		69.6	104.4	135.0	69.6	104.4	135.0	49.7	74.5	99.3
30"	102"	115.2	135.0	135.0	115.2	135.0	135.0	82.2	123.4	135.0
36"		99.4	135.0	135.0	99.4	135.0	135.0	71.0	106.5	135.0
42"		88.4	132.6	135.0	88.4	132.6	135.0	63.1	94.6	126.1
48"		80.3	120.5	135.0	80.3	120.5	135.0	57.3	86.0	114.6
52"		76.1	114.1	135.0	76.1	114.1	135.0	54.3	81.5	108.6
54"		74.2	111.4	135.0	74.2	111.4	135.0	53.0	79.5	106.0
60"		69.6	104.4	135.0	69.6	104.4	135.0	49.7	74.5	99.3
66"		66.0	99.0	132.0	66.0	99.0	132.0	47.1	70.7	94.2
72"		63.3	94.9	126.5	63.3	94.9	126.5	45.2	67.8	90.3
30"	108"	107.8	135.0	135.0	107.8	135.0	135.0	76.9	115.4	135.0
36"		92.8	135.0	135.0	92.8	135.0	135.0	66.2	99.4	132.4
42"		82.3	123.4	135.0	82.3	123.4	135.0	58.7	88.1	117.4
48"		74.6	111.9	135.0	74.6	111.9	135.0	53.2	79.9	106.4
52"		70.5	105.8	135.0	70.5	105.8	135.0	50.3	75.5	100.6
54"		68.7	103.1	135.0	68.7	103.1	135.0	49.1	73.6	98.1
60"		64.2	96.4	128.5	64.2	96.4	128.5	45.8	68.8	91.7
66"		60.7	91.1	121.5	60.7	91.1	121.5	43.3	65.0	86.7
72"		58.0	87.0	116.0	58.0	87.0	116.0	41.4	62.1	82.8
30"	114"	101.2	135.0	135.0	101.2	135.0	135.0	72.2	108.4	135.0
36"		87.0	130.5	135.0	87.0	130.5	135.0	62.1	93.2	124.2
42"		77.0	115.5	135.0	77.0	115.5	135.0	54.9	82.4	109.9
48"		69.6	104.4	135.0	69.6	104.4	135.0	49.7	74.5	99.3
52"		65.7	98.6	131.4	65.7	98.6	131.4	46.9	70.4	93.8
54"		64.0	96.0	128.0	64.0	96.0	128.0	45.7	68.5	91.3
60"		59.7	89.5	119.3	59.7	89.5	119.3	42.6	63.9	85.1
66"		56.2	84.4	112.5	56.2	84.4	112.5	40.1	60.2	80.3
72"		53.5	80.3	107.1	53.5	80.3	107.1	38.2	57.3	76.4
30"	120"	95.5	135.0	135.0	95.5	135.0	135.0	68.1	102.2	135.0
36"		81.9	122.8	135.0	81.9	122.8	135.0	58.4	87.7	116.9
42"		72.3	108.5	135.0	72.3	108.5	135.0	51.6	77.4	103.2
48"		65.3	97.9	130.5	65.3	97.9	130.5	46.6	69.9	93.1
52"		61.5	92.3	123.0	61.5	92.3	123.0	43.9	65.9	87.8
54"		59.9	89.8	119.7	59.9	89.8	119.7	42.7	64.1	85.4
60"		55.7	83.5	111.4	55.7	83.5	111.4	39.7	59.6	79.5
66"		52.4	78.5	104.7	52.4	78.5	104.7	37.4	56.1	74.7
72"		49.7	74.6	99.4	49.7	74.6	99.4	35.5	53.2	71.0
30"	126"	90.3	135.0	135.0	90.3	135.0	135.0	64.4	96.7	128.9
36"		77.3	116.0	135.0	77.3	116.0	135.0	55.2	82.8	110.4
42"		68.2	102.3	135.0	68.2	102.3	135.0	48.7	73.0	97.3
48"		61.4	92.1	122.8	61.4	92.1	122.8	43.8	65.8	87.6
52"		57.8	86.7	115.6	57.8	86.7	115.6	41.3	61.9	82.5
54"		56.2	84.4	112.5	56.2	84.4	112.5	40.1	60.2	80.3
60"		52.2	78.3	104.4	52.2	78.3	104.4	37.3	55.9	74.5
66"		49.0	73.5	98.0	49.0	73.5	98.0	35.0	52.5	69.9

ANCHOR LOAD CAPACITY – PSF (3/8" MAX. SHIMS)
EXT.(+) & INT.(–)

NOMINAL DIMS.		ANCHORS TYPE 'BW'			ANCHORS TYPE 'BC'			ANCHORS TYPE 'CM'		
WIDTH (W)	FRAME HEIGHT	BW2	BW3	BW4	BC2	BC3	BC4	CM2	CM3	CM4
30"	132"	85.7	128.5	135.0	85.7	128.5	135.0	61.1	91.7	122.3
36"		73.3	109.9	135.0	73.3	109.9	135.0	52.3	78.5	104.6
42"		64.5	96.7	129.0	64.5	96.7	129.0	46.0	69.1	92.0
48"		58.0	87.0	116.0	58.0	87.0	116.0	41.4	62.1	82.8
52"		54.5	81.8	109.1	54.5	81.8	109.1	38.9	58.4	77.9
54"		53.0	79.5	106.1	53.0	79.5	106.1	37.8	56.8	75.7
60"		49.1	73.7	98.3	49.1	73.7	98.3	35.1	52.6	70.1
30"	138"	81.5	122.2	135.0	81.5	122.2	135.0	58.1	87.3	116.3
36"		69.6	104.4	135.0	69.6	104.4	135.0	49.7	74.5	99.3
42"		61.2	91.8	122.4	61.2	91.8	122.4	43.7	65.5	87.3
48"		54.9	82.4	109.9	54.9	82.4	109.9	39.2	58.8	78.4
52"		51.6	77.4	103.3	51.6	77.4	103.3	36.8	55.3	73.7
54"		50.2	75.2	100.3	50.2	75.2	100.3	35.8	53.7	71.6
60"		46.4	69.6	92.8	46.4	69.6	92.8	33.1	49.7	66.2
30"	144"	77.7	116.5	135.0	77.7	116.5	135.0	55.4	83.2	110.9
36"		66.3	99.4	132.6	66.3	99.4	132.6	47.3	71.0	94.6
42"		58.2	87.3	116.4	58.2	87.3	116.4	41.5	62.3	83.1
48"		52.2	78.3	104.4	52.2	78.3	104.4	37.3	55.9	74.5
52"		49.0	73.5	98.0	49.0	73.5	98.0	35.0	52.5	69.9
54"		47.6	71.4	95.2	47.6	71.4	95.2	34.0	51.0	67.9
60"		44.0	65.9	87.9	44.0	65.9	87.9	31.4	47.1	62.7

INTERPOLATION BETWEEN WIDTHS OR HEIGHTS ALLOWED.

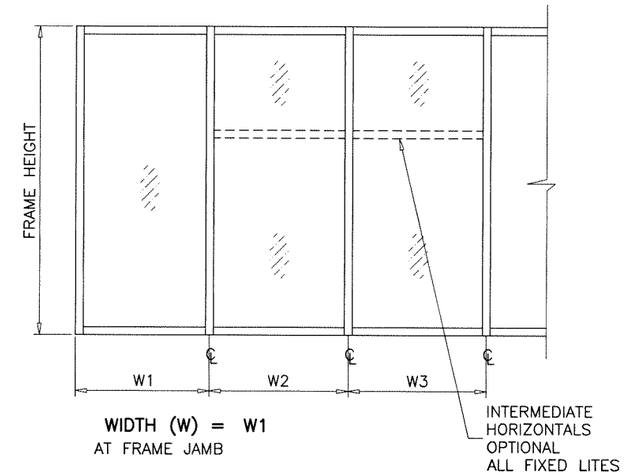

WIDTH (W) = W1
AT FRAME JAMB

WIDTH (W) = $\frac{W2 + W3}{2}$
AT FRAME MULLION

SEE SHEET 12 FOR ANCHOR TYPES.

Sealed: 8/19/2025

JALAL FAROOQ LICENSE No. 81223 STATE OF FLORIDA PROFESSIONAL ENGINEER

FL #19973

HEAD/SILL ANCHORS

AL-FAROOQ CORPORATION
ENGINEERS & PRODUCT DEVELOPMENT
9360 SUNSET DRIVE, SUITE 220
MIAMI, FLORIDA 33173 (C.A.N. 3538)
TEL. (305) 264-8100 FAX. (305) 262-6978

COMP-ANL\21-51FAGP

SERIES FRONT SET ALUM WINDOWALL SYS. (L.M.I.)

Aldora Aluminum & Glass Products Inc.
4250 Coral Ridge Drive, Suite 101
Coral Springs, FL. 33065
Tel. (954) 784-6900 Fax. (954) 784-6901

revisions:

no	date	by	description

date: 06-10-21
scale: –
dr. by: TARIQ
chk. by:

drawing no. 21-51F

JAMB ANCHOR LOAD CAPACITY – PSF
EXT.(+) & INT.(–)

NOMINAL DIMS.		ANCHORS 'AW', 'AC'	ANCHORS TYPES 'CM'		ANCHORS TYPES 'BW' & 'BC'	
WIDTH (W)	FRAME HEIGHT	1/4" SHIMS	3/8" SHIMS	1/4" SHIMS	3/8" SHIMS	1/4" SHIMS
30"	84"	135.0	135.0	135.0	135.0	135.0
36"		135.0	135.0	135.0	135.0	135.0
42"		135.0	135.0	135.0	135.0	135.0
48"		135.0	135.0	135.0	135.0	135.0
54"		135.0	131.5	135.0	135.0	135.0
60"		135.0	124.9	135.0	135.0	135.0
66"		135.0	120.2	135.0	135.0	135.0
72"		135.0	117.1	135.0	135.0	135.0
30"	90"	135.0	135.0	135.0	135.0	135.0
36"		135.0	135.0	135.0	135.0	135.0
42"		135.0	135.0	135.0	135.0	135.0
48"		135.0	135.0	135.0	135.0	135.0
54"		135.0	135.0	135.0	135.0	135.0
60"		135.0	128.4	135.0	135.0	135.0
66"		135.0	122.9	135.0	135.0	135.0
72"		135.0	118.9	135.0	135.0	135.0
30"	96"	135.0	135.0	135.0	135.0	135.0
36"		135.0	135.0	135.0	135.0	135.0
42"		135.0	135.0	135.0	135.0	135.0
48"		135.0	133.8	135.0	135.0	135.0
54"		135.0	124.1	135.0	135.0	135.0
60"		135.0	116.8	135.0	135.0	135.0
66"		135.0	111.2	135.0	135.0	135.0
72"		133.3	107.0	133.3	135.0	135.0
30"	102"	135.0	135.0	135.0	135.0	135.0
36"		135.0	135.0	135.0	135.0	135.0
42"		135.0	135.0	135.0	135.0	135.0
48"		135.0	135.0	135.0	135.0	135.0
54"		135.0	128.4	135.0	135.0	135.0
60"		135.0	120.4	135.0	135.0	135.0
66"		135.0	114.2	135.0	135.0	135.0
72"		135.0	109.5	135.0	135.0	135.0
30"	108"	135.0	135.0	135.0	135.0	135.0
36"		135.0	135.0	135.0	135.0	135.0
42"		135.0	135.0	135.0	135.0	135.0
48"		135.0	129.0	135.0	135.0	135.0
54"		135.0	118.9	135.0	135.0	135.0
60"		135.0	111.2	135.0	135.0	135.0
66"		130.9	105.1	130.9	135.0	135.0
72"		125.0	100.4	125.0	130.6	135.0
30"	114"	135.0	135.0	135.0	135.0	135.0
36"		135.0	135.0	135.0	135.0	135.0
42"		135.0	135.0	135.0	135.0	135.0
48"		135.0	133.8	135.0	135.0	135.0
54"		135.0	123.0	135.0	135.0	135.0
60"		135.0	114.7	135.0	135.0	135.0
66"		134.7	108.1	134.7	135.0	135.0
72"		128.2	102.9	128.2	133.9	135.0
30"	120"	135.0	135.0	135.0	135.0	135.0
36"		135.0	135.0	135.0	135.0	135.0
42"		135.0	135.0	135.0	135.0	135.0
48"		135.0	125.4	135.0	135.0	135.0
54"		135.0	115.1	135.0	135.0	135.0
60"		133.3	107.0	133.3	135.0	135.0
66"		125.4	100.7	125.4	131.0	135.0
72"		119.0	95.6	119.0	124.3	135.0

JAMB ANCHOR LOAD CAPACITY – PSF
EXT.(+) & INT.(–)

NOMINAL DIMS.		ANCHORS 'AW', 'AC'	ANCHORS TYPES 'CM'		ANCHORS TYPES 'BW' & 'BC'	
WIDTH (W)	FRAME HEIGHT	1/4" SHIMS	3/8" SHIMS	1/4" SHIMS	3/8" SHIMS	1/4" SHIMS
30"	126"	135.0	135.0	135.0	135.0	135.0
36"		135.0	135.0	135.0	135.0	135.0
42"		135.0	135.0	135.0	135.0	135.0
48"		135.0	129.9	135.0	135.0	135.0
54"		135.0	118.9	135.0	135.0	135.0
60"		135.0	110.4	135.0	135.0	135.0
66"		129.0	103.6	129.0	134.8	135.0
72"		122.2	98.1	122.2	127.6	135.0
30"	132"	135.0	135.0	135.0	135.0	135.0
36"		135.0	135.0	135.0	135.0	135.0
42"		135.0	135.0	135.0	135.0	135.0
48"		135.0	122.7	135.0	135.0	135.0
54"		135.0	112.1	135.0	135.0	135.0
60"		129.4	103.9	129.4	135.0	135.0
66"		121.2	97.3	121.2	126.6	135.0
72"		114.6	92.0	114.6	119.7	135.0
30"	138"	135.0	135.0	135.0	135.0	135.0
36"		135.0	135.0	135.0	135.0	135.0
42"		135.0	135.0	135.0	135.0	135.0
48"		135.0	126.8	135.0	135.0	135.0
54"		135.0	115.7	135.0	135.0	135.0
60"		133.3	107.0	133.3	135.0	135.0
66"		124.7	100.1	124.7	130.2	135.0
72"		117.6	94.4	117.6	122.9	135.0
30"	144"	135.0	135.0	135.0	135.0	135.0
36"		135.0	135.0	135.0	135.0	135.0
42"		135.0	134.3	135.0	135.0	135.0
48"		135.0	120.4	135.0	135.0	135.0
54"		135.0	109.8	135.0	135.0	135.0
60"		126.3	101.4	126.3	131.9	135.0
66"		117.9	94.7	117.9	123.2	135.0
72"		111.1	89.2	111.1	116.0	135.0

INTERPOLATION BETWEEN WIDTHS OR HEIGHTS ALLOWED.

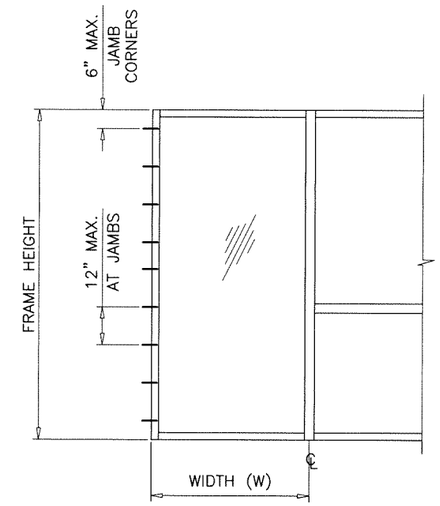

SEE SHEET 12 FOR ANCHOR TYPES.

Sealed: 8/19/2025

JALAL FAROOQ
LICENSE
No. 81223
STATE OF FLORIDA
PROFESSIONAL ENGINEER

JAMB ANCHORS

FL #19973

AL-FAROOQ CORPORATION
ENGINEERS & PRODUCT DEVELOPMENT
9360 SUNSET DRIVE, SUITE 220
MIAMI, FLORIDA 33173 (C.A.N. 3538)
TEL. (305) 264-8100 FAX. (305) 262-6978

COMP-ANL\21-51FAGP

SERIES FRONT SET ALUM WINDOWALL SYS. (L.M.I.)

Aldora Aluminum & Glass Products Inc.
4250 Coral Ridge Drive, Suite 101
Coral Springs, FL. 33065
Tel. (954) 784-6900 Fax. (954) 784-6901

revisions:

no	date	by	description

date: 06-10-21
scale: –
dr. by: TARIQ
chk. by:

drawing no. 21-51F

STD. DOOR MULLION LOAD CAPACITY		
NOMINAL DIMS.		W/O REINF.
WIDTH (W)	FRAME HEIGHT	EXT.(+) & INT.(−)
30"	84"	90.0
36"		90.0
42"		90.0
48"		90.0
54"		90.0
60"		90.0
30"	96"	90.0
36"		90.0
42"		90.0
48"		85.9
54"		76.4
60"		68.7
30"	97−3/4"	90.0
36"		90.0
42"		90.0
48"		82.7
54"		73.5
58"		68.4

INTERPOLATION BETWEEN WIDTHS OR HEIGHTS ALLOWED.

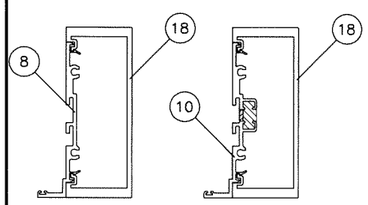

STD. DOOR MULLION W/O REINF.
(LEVEL 'D' IMPACT)

Ix IN^4	Sx IN^3
6.063	2.695

STD. DOOR MULLION LOAD CAPACITY		
NOMINAL DIMS.		WITH REINF.
WIDTH (W)	FRAME HEIGHT	EXT.(+) & INT.(−)
30"	84"	100.0
36"		100.0
42"		100.0
48"		100.0
54"		100.0
60"		100.0
30"	96"	100.0
36"		100.0
42"		100.0
48"		100.0
54"		100.0
60"		100.0
30"	102"	100.0
36"		100.0
42"		100.0
48"		100.0
54"		100.0
60"		91.6
30"	108"	100.0
36"		100.0
42"		100.0
48"		100.0
54"		90.8
60"		81.7
30"	114"	100.0
36"		100.0
42"		100.0
48"		91.7
54"		81.5
58"		75.9
30"	120"	100.0
36"		100.0
42"		94.6
48"		82.7
54"		73.6

INTERPOLATION BETWEEN WIDTHS OR HEIGHTS ALLOWED.

DOOR MULLION ANCHORS LOAD CAPACITY − PSF								
NOMINAL DIMS.		6 ANCHORS AT MULLION ENDS				8 ANCHORS AT MULLION ENDS		
		1/4" MAX. SHIMS			3/8" SHIMS	1/4" MAX. SHIMS		3/8" SHIMS
		ANCHOR TYPES 'AW' & 'AC'	ANCHOR TYPES 'CM"	ANCHOR TYPES 'BW' & 'BC'	ANCHOR TYPES 'BW' & 'BC'	ANCHOR TYPES 'AW' & 'AC'	ANCHOR TYPES 'BW' & 'BC'	ANCHOR TYPES 'BW' & 'BC'
WIDTH (W)	FRAME HEIGHT	EXT. (+) INT. (−)	EXT. (+) INT. (−)	EXT. (+) INT. (−)	EXT. (+) INT. (−)	EXT. (+) INT. (−)	EXT. (+) INT. (−)	EXT. (+) INT. (−)
30"	84"	100.0	100.0	100.0	100.0	100.0	100.0	100.0
36"		100.0	100.0	100.0	100.0	100.0	100.0	100.0
42"		100.0	100.0	100.0	100.0	100.0	100.0	100.0
48"		100.0	100.0	100.0	100.0	100.0	100.0	100.0
54"		99.0	100.0	100.0	99.4	100.0	100.0	100.0
60"		89.1	100.0	100.0	89.5	100.0	100.0	100.0
30"	96"	100.0	100.0	100.0	100.0	100.0	100.0	100.0
36"		100.0	100.0	100.0	100.0	100.0	100.0	100.0
42"		100.0	100.0	100.0	100.0	100.0	100.0	100.0
48"		97.5	100.0	100.0	97.9	100.0	100.0	100.0
54"		86.7	100.0	100.0	87.0	100.0	100.0	100.0
60"		78.0	100.0	100.0	78.3	100.0	100.0	100.0
30"	102"	100.0	100.0	100.0	100.0	100.0	100.0	100.0
36"		100.0	100.0	100.0	100.0	100.0	100.0	100.0
42"		100.0	100.0	100.0	100.0	100.0	100.0	100.0
48"		91.8	100.0	100.0	92.1	100.0	100.0	100.0
54"		81.6	100.0	100.0	81.9	100.0	100.0	100.0
60"		73.4	100.0	96.6	73.7	97.9	100.0	98.3
30"	108"	100.0	100.0	100.0	100.0	100.0	100.0	100.0
36"		100.0	100.0	100.0	100.0	100.0	100.0	100.0
42"		99.0	100.0	100.0	99.4	100.0	100.0	100.0
48"		86.7	100.0	100.0	87.0	100.0	100.0	100.0
54"		77.0	100.0	100.0	77.3	100.0	100.0	100.0
60"		69.3	100.0	91.2	69.6	92.4	100.0	92.8
30"	114"	100.0	100.0	100.0	100.0	100.0	100.0	100.0
36"		100.0	100.0	100.0	100.0	100.0	100.0	100.0
42"		93.8	100.0	100.0	94.2	100.0	100.0	100.0
48"		82.1	100.0	100.0	82.4	100.0	100.0	100.0
54"		73.0	100.0	96.0	73.3	97.3	100.0	97.7
58"		67.9	100.0	89.4	68.2	90.6	100.0	90.9
30"	120"	100.0	100.0	100.0	100.0	100.0	100.0	100.0
36"		100.0	100.0	100.0	100.0	100.0	100.0	100.0
42"		89.1	100.0	100.0	89.5	100.0	100.0	100.0
48"		78.0	100.0	100.0	78.3	100.0	100.0	100.0
54"		69.3	100.0	91.2	69.6	92.4	100.0	92.8

INTERPOLATION BETWEEN WIDTHS OR HEIGHTS ALLOWED.

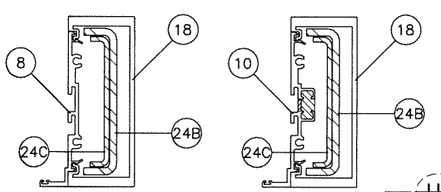

STD. DOOR MULLION WITH REINF.
(LEVEL 'D' & 'E' IMPACT)

	Ix IN^4	Sx IN^3
ALUMINUM	6.063	2.695
STEEL	2.343	1.209
TOTAL Ix ALUM + Ix STL X 2.9	12.790	

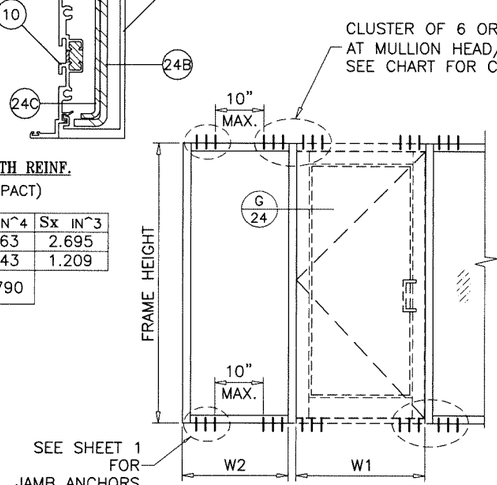

$$\text{WIDTH (W)} = \frac{W1 + W2}{2}$$

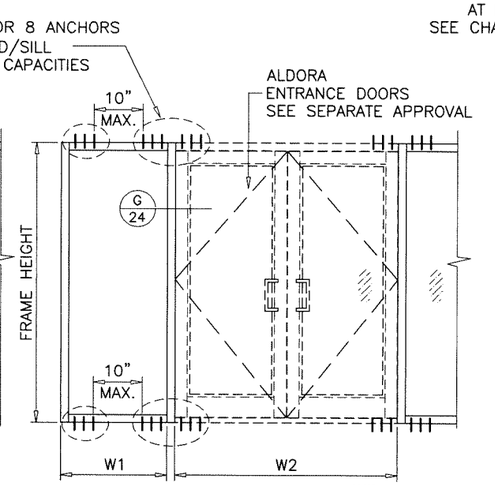

$$\text{WIDTH (W)} = \frac{W1}{2} + \frac{W2}{4}$$

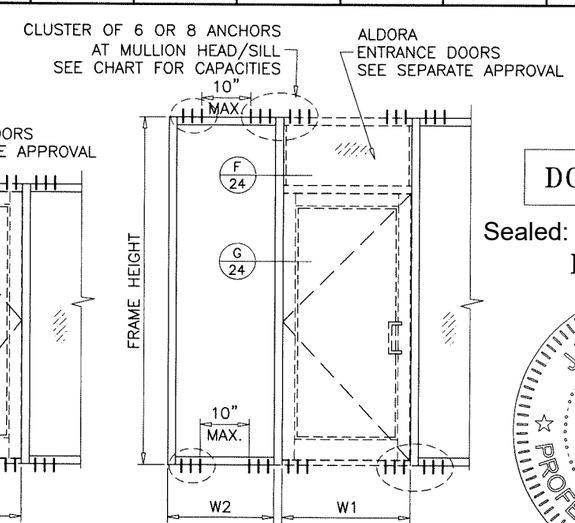

$$\text{WIDTH (W)} = \frac{W1 + W2}{2}$$

DOOR MULLION

Sealed: 8/19/2025

FL #19973

JALAL FAROOQ
LICENSE
No. 81223
STATE OF FLORIDA
PROFESSIONAL ENGINEER

AL-FAROOQ CORPORATION
ENGINEERS & PRODUCT DEVELOPMENT
9360 SUNSET DRIVE, SUITE 220
MIAMI, FLORIDA 33173 (C.A.N. 3538)
TEL. (305) 264-8100 FAX. (305) 262-6978

COMP-ANL\21-51FAGP

SERIES FRONT SET ALUM WINDOWALL SYS. (L.M.I.)

Aldora Aluminum & Glass Products Inc.
4250 Coral Ridge Drive, Suite 101
Coral Springs, FL. 33065
Tel. (954) 784-6900 Fax. (954) 784-6901

revisions:

no	date	by	description

date: 06-10-21
scale: –
dr. by: TARIQ
chk. by:

drawing no. 21-51F

H.D. DOOR MULLION LOAD CAPACITY		
NOMINAL DIMS.		WITH REINF.
WIDTH (W)	FRAME HEIGHT	EXT.(+) & INT.(−)
30"	126"	100.0
36"		100.0
42"		100.0
48"		100.0
54"		100.0
60"		100.0
30"	132"	100.0
36"		100.0
42"		100.0
48"		100.0
54"		100.0
60"		100.0
30"	138"	100.0
36"		100.0
42"		100.0
48"		100.0
54"		100.0
57"		100.0
30"	144"	100.0
36"		100.0
42"		100.0
48"		100.0
54"		100.0

INTERPOLATION BETWEEN WIDTHS OR HEIGHTS ALLOWED.

DOOR MULLION ANCHORS LOAD CAPACITY – PSF								
NOMINAL DIMS.		6 ANCHORS AT MULLION ENDS				8 ANCHORS AT MULLION ENDS		
		1/4" MAX. SHIMS			3/8" SHIMS	1/4" MAX. SHIMS		3/8" SHIMS
		ANCHOR TYPES 'AW' & 'AC'	ANCHOR TYPES 'CM'	ANCHOR TYPES 'BW' & 'BC'	ANCHOR TYPES 'BW' & 'BC'	ANCHOR TYPES 'AW' & 'AC'	ANCHOR TYPES 'BW' & 'BC'	ANCHOR TYPES 'BW' & 'BC'
WIDTH (W)	FRAME HEIGHT	EXT. (+) INT. (−)	EXT. (+) INT. (−)	EXT. (+) INT. (−)	EXT. (+) INT. (−)	EXT. (+) INT. (−)	EXT. (+) INT. (−)	EXT. (+) INT. (−)
30"	126"	100.0	100.0	100.0	100.0	100.0	100.0	100.0
36"		99.0	100.0	100.0	99.4	100.0	100.0	100.0
42"		84.9	100.0	100.0	85.2	100.0	100.0	100.0
48"		74.3	100.0	97.7	74.6	99.0	100.0	99.4
54"		66.0	97.3	86.9	66.3	88.0	100.0	88.4
60"		59.4	87.5	78.2	59.7	79.2	100.0	79.5
30"	132"	100.0	100.0	100.0	100.0	100.0	100.0	100.0
36"		94.5	100.0	100.0	94.9	100.0	100.0	100.0
42"		81.0	100.0	100.0	81.4	100.0	100.0	100.0
48"		70.9	100.0	93.3	71.2	94.5	100.0	94.9
54"		63.0	92.8	82.9	63.3	84.0	100.0	84.4
60"		56.7	83.6	74.6	56.9	75.6	99.5	75.9
30"	138"	100.0	100.0	100.0	100.0	100.0	100.0	100.0
36"		90.4	100.0	100.0	90.8	100.0	100.0	100.0
42"		77.5	100.0	100.0	77.8	100.0	100.0	100.0
48"		67.8	99.9	89.2	68.1	90.4	100.0	90.8
54"		60.3	88.8	79.3	60.5	80.4	100.0	80.7
57"		57.1	84.1	75.1	57.3	76.2	100.0	76.4
30"	144"	100.0	100.0	100.0	100.0	100.0	100.0	100.0
36"		86.7	100.0	100.0	87.0	100.0	100.0	100.0
42"		74.3	100.0	97.7	74.6	99.0	100.0	99.4
48"		65.0	95.8	85.5	65.3	86.7	100.0	87.0
54"		57.8	85.1	76.0	58.0	77.0	100.0	77.3

INTERPOLATION BETWEEN WIDTHS OR HEIGHTS ALLOWED.

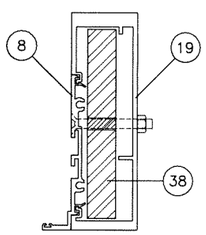

H.D. DOOR MULLION WITH REINF.
(LEVEL 'D' & 'E' IMPACT)

	Ix IN^4	Sx IN^3
ALUMINUM	11.342	3.497
STEEL	7.8125	3.125
TOTAL Ix ALUM + Ix STL X 2.9	33.7739	

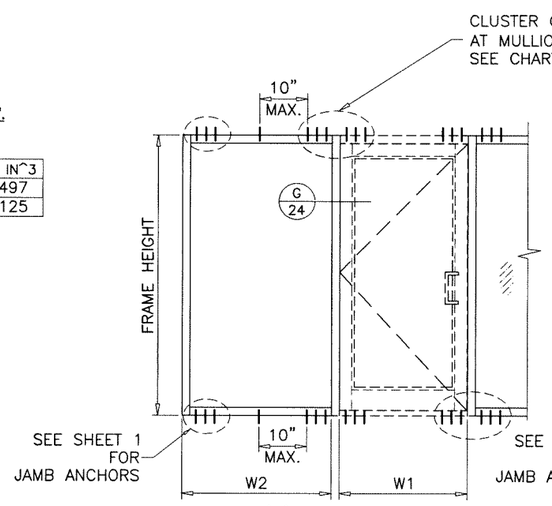

$$\text{WIDTH (W)} = \frac{W1 + W2}{2}$$

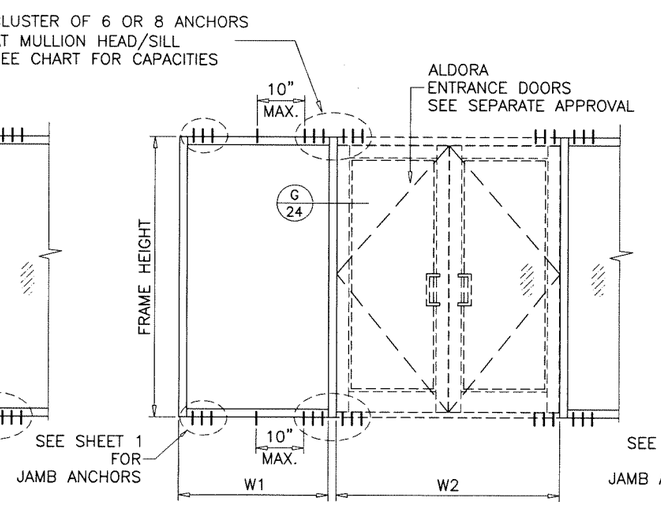

$$\text{WIDTH (W)} = \frac{W1}{2} + \frac{W2}{4}$$

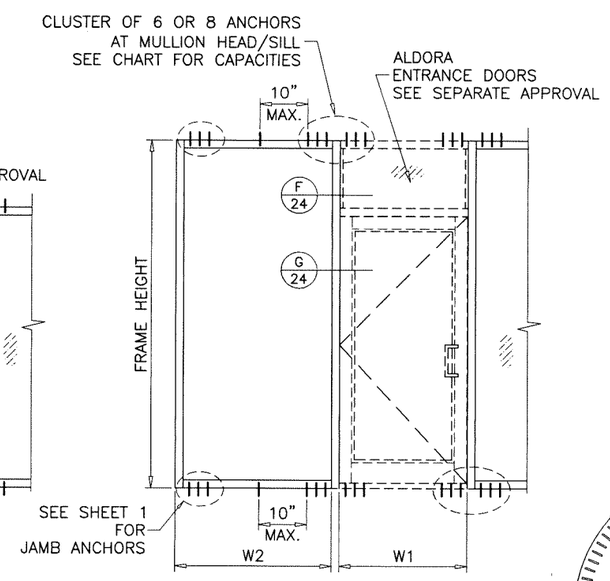

$$\text{WIDTH (W)} = \frac{W1 + W2}{2}$$

Sealed: 8/19/2025

JALAL FAROOQ LICENSE No. 81223 STATE OF FLORIDA PROFESSIONAL ENGINEER

DOOR MULLION

FL #19973

AL-FAROOQ CORPORATION
ENGINEERS & PRODUCT DEVELOPMENT
9360 SUNSET DRIVE, SUITE 220
MIAMI, FLORIDA 33173 (C.A.N. 3538)
TEL. (305) 264-8100 FAX. (305) 262-6978

COMP-ANL\21-51FAGP

SERIES FRONT SET ALUM WINDOWALL SYS. (L.M.I.)

Aldora Aluminum & Glass Products Inc.
4250 Coral Ridge Drive, Suite 101
Coral Springs, FL. 33065
Tel. (954) 784-6900 Fax. (954) 784-6901

revisions:

no	date	by	description

date: 06-10-21
scale: –
dr. by: TARIQ
chk. by:

drawing no. 21-51F

STD. DOOR MULLION LOAD CAPACITY – PSF

NOMINAL DIMS.				WITH REINF.
FRAME HEIGHT INCHES	DOOR HEIGHT INCHES	WIDTH (W1) INCHES	WIDTH (W2) INCHES	EXT. (+) INT. (–)
108	84	84	30	97.1
			36	91.6
			42	86.8
			48	82.4
			54	78.4
			60	74.8
		98–7/16	30	86.6
			36	82.2
			42	78.3
			48	74.7
			54	71.5
			60	68.5
120	84	84	30	74.0
			36	70.1
			42	66.6
			48	63.4
			54	60.5
			60	57.9
		98–7/16	30	65.9
			36	62.8
			42	59.9
			48	57.3
			54	55.0
			60	52.8
108	96	84	30	100.0
			36	100.0
			42	97.5
			48	92.0
			54	87.1
			60	82.7
		98–7/16	30	99.4
			36	93.7
			42	88.6
			48	84.1
			54	80.0
			60	76.2
120	96	84	30	80.3
			36	75.7
			42	71.6
			48	68.0
			54	64.6
			60	61.6
		98–7/16	30	71.7
			36	68.1
			42	64.7
			48	61.7
			54	59.0
			60	56.5

INTERPOLATION BETWEEN WIDTHS OR HEIGHTS ALLOWED.

DOOR MULLION ANCHORS LOAD CAPACITY – PSF

NOMINAL DIMS.				1/4" MAX. SHIMS			3/8" MAX. SHIMS		
				ANCHOR TYPES 'AW' & 'AC'	ANCHOR TYPES 'CM"	ANCHOR TYPES 'BW' & 'BC'	ANCHOR TYPES 'BW' & 'BC'	ANCHOR TYPES 'CM"	ANCHOR TYPES 'BW' & 'BC'
FRAME HEIGHT INCHES	DOOR HEIGHT INCHES	WIDTH (W1) INCHES	WIDTH (W2) INCHES	EXT. (+) INT. (–)	EXT. (+) INT. (–)	EXT. (+) INT. (–)	EXT. (+) INT. (–)	EXT. (+) INT. (–)	EXT. (+) INT. (–)
108	84	84	30	100.0	100.0	100.0	81.8	75.9	100.0
			36	100.0	100.0	100.0	77.4	71.8	100.0
			42	95.1	100.0	100.0	73.4	68.1	95.5
			48	90.4	100.0	100.0	69.8	64.8	90.8
			54	86.2	100.0	100.0	66.6	61.8	86.5
			60	82.4	100.0	100.0	63.6	59.0	82.7
		98–7/16	30	94.4	100.0	100.0	72.9	67.6	94.8
			36	89.8	100.0	100.0	69.4	64.3	90.2
			42	85.7	100.0	100.0	66.1	61.4	86.0
			48	81.9	100.0	100.0	63.2	58.6	82.2
			54	78.4	100.0	100.0	60.5	56.2	78.7
			60	75.2	100.0	98.9	58.1	53.9	75.5
120	84	84	30	98.5	100.0	100.0	76.0	70.5	98.8
			36	93.0	100.0	100.0	71.8	66.6	93.3
			42	88.0	100.0	100.0	68.0	63.1	88.4
			48	83.6	100.0	100.0	64.6	59.9	83.9
			54	79.6	100.0	100.0	61.5	57.0	79.9
			60	76.0	100.0	99.9	58.7	54.4	76.3
		98–7/16	30	87.8	100.0	100.0	67.8	62.9	88.2
			36	83.4	100.0	100.0	64.4	59.8	83.7
			42	79.4	100.0	100.0	61.3	56.9	79.8
			48	75.8	100.0	99.7	58.5	54.3	76.1
			54	72.5	100.0	95.4	56.0	51.9	72.8
			60	69.5	100.0	91.4	53.7	49.8	69.8
108	96	84	30	100.0	100.0	100.0	78.3	72.7	100.0
			36	96.2	100.0	100.0	74.3	68.9	96.6
			42	91.4	100.0	100.0	70.6	65.5	91.8
			48	87.1	100.0	100.0	67.3	62.4	87.5
			54	83.2	100.0	100.0	64.2	59.6	83.5
			60	79.6	100.0	100.0	61.5	57.0	79.9
		98–7/16	30	90.2	100.0	100.0	69.7	64.6	90.6
			36	86.0	100.0	100.0	66.4	61.6	86.3
			42	82.2	100.0	100.0	63.5	58.9	82.5
			48	78.7	100.0	100.0	60.8	56.4	79.0
			54	75.5	100.0	99.3	58.3	54.1	75.8
			60	72.5	100.0	95.4	56.0	51.9	72.8
120	96	84	30	94.5	100.0	100.0	73.0	67.7	94.9
			36	89.5	100.0	100.0	69.1	64.1	89.8
			42	84.9	100.0	100.0	65.6	60.8	85.2
			48	80.8	100.0	100.0	62.4	57.9	81.1
			54	77.0	100.0	100.0	59.5	55.2	77.3
			60	73.6	100.0	96.8	56.8	52.7	73.9
		98–7/16	30	84.2	100.0	100.0	65.0	60.3	84.5
			36	80.1	100.0	100.0	61.9	57.4	80.4
			42	76.5	100.0	100.0	59.0	54.8	76.7
			48	73.1	100.0	96.1	56.4	52.4	73.4
			54	70.0	100.0	92.1	54.1	50.2	70.3
			60	67.2	99.0	88.4	51.9	48.1	67.4

INTERPOLATION BETWEEN WIDTHS OR HEIGHTS ALLOWED.

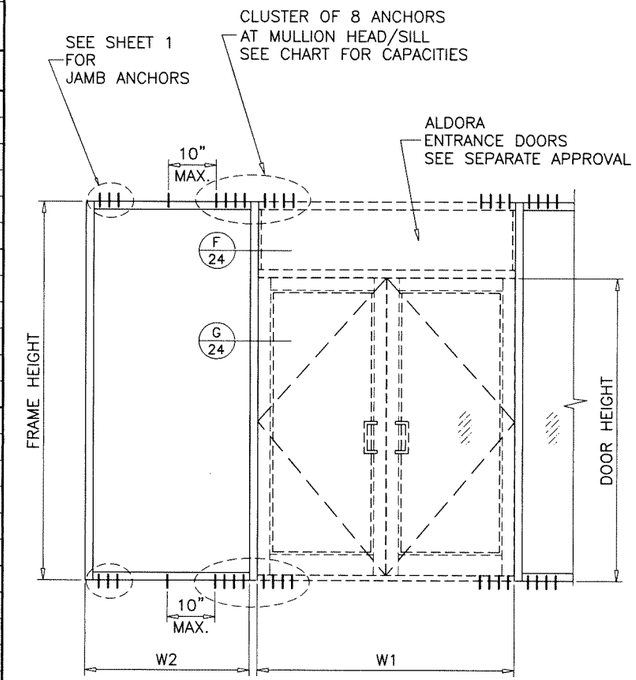

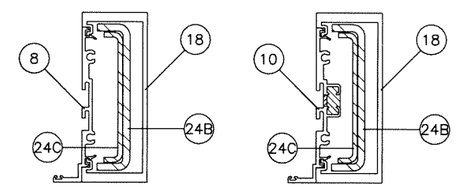

STD. DOOR MULLION WITH REINF.
(LEVEL 'D' & 'E' IMPACT)

	Ix IN^4	Sx IN^3
ALUMINUM	6.063	2.695
STEEL	2.343	1.209
TOTAL Ix ALUM + Ix STL X 2.9	12.790	

Sealed: 8/19/2025

JALAL FAROOQ LICENSE No. 81223 STATE OF FLORIDA PROFESSIONAL ENGINEER

DOOR MULLION

FL #19973

AL-FAROOQ CORPORATION
ENGINEERS & PRODUCT DEVELOPMENT
9360 SUNSET DRIVE, SUITE 220
MIAMI, FLORIDA 33173
(C.A.N. 3538)
TEL. (305) 264-8100 FAX. (305) 262-6978

COMP–ANL\21–51FAGP

SERIES FRONT SET ALUM WINDOWALL SYS. (L.M.I.)

Aldora Aluminum & Glass Products Inc.
4250 Coral Ridge Drive, Suite 101
Coral Springs, FL. 33065
Tel. (954) 784-6900 Fax. (954) 784-6901

revisions:

no	date	by	description

date: 06-10-21
scale: –
dr. by: TARIQ
chk. by:

drawing no. 21–51F

H.D. DOOR MULLION LOAD CAPACITY – PSF				
NOMINAL DIMS.				WITH REINF.
FRAME HEIGHT INCHES	DOOR HEIGHT INCHES	WIDTH (W1) INCHES	WIDTH (W2) INCHES	EXT. (+) INT. (–)
144	84	84	30	100.0
			36	95.0
			42	90.5
			48	86.3
			54	82.5
			60	79.1
		92	30	93.5
			36	89.1
			42	85.1
			48	81.4
			54	78.0
			60	74.9
		98–7/16	30	88.9
			36	84.9
			42	81.2
			48	77.8
			54	74.7
			60	71.9
	96	84	30	100.0
			36	97.9
			42	93.1
			48	88.7
			54	84.7
			60	81.0
		92	30	96.6
			36	91.9
			42	87.6
			48	83.7
			54	80.1
			60	76.9
		98–7/16	30	91.8
			36	87.6
			42	83.7
			48	80.1
			54	76.8
			60	73.8
	108	84	30	100.0
			36	100.0
			42	97.8
			48	92.9
			54	88.6
			60	84.6
		92	30	100.0
			36	96.9
			42	92.2
			48	87.9
			54	84.0
			60	80.4
		98–7/16	30	97.2
			36	92.5
			42	88.1
			48	84.2
			54	80.6
			60	77.3

H.D. DOOR MULLION LOAD CAPACITY – PSF				
NOMINAL DIMS.				WITH REINF.
FRAME HEIGHT INCHES	DOOR HEIGHT INCHES	WIDTH (W1) INCHES	WIDTH (W2) INCHES	EXT. (+) INT. (–)
144	118–1/4	84	30	100.0
			36	100.0
			42	100.0
			48	98.5
			54	93.6
			60	89.1
		92	30	100.0
			36	100.0
			42	98.2
			48	93.3
			54	88.9
			60	84.9
		98–7/16	30	100.0
			36	98.9
			42	94.0
			48	89.5
			54	85.5
			60	81.8

INTERPOLATION BETWEEN WIDTHS OR HEIGHTS ALLOWED.

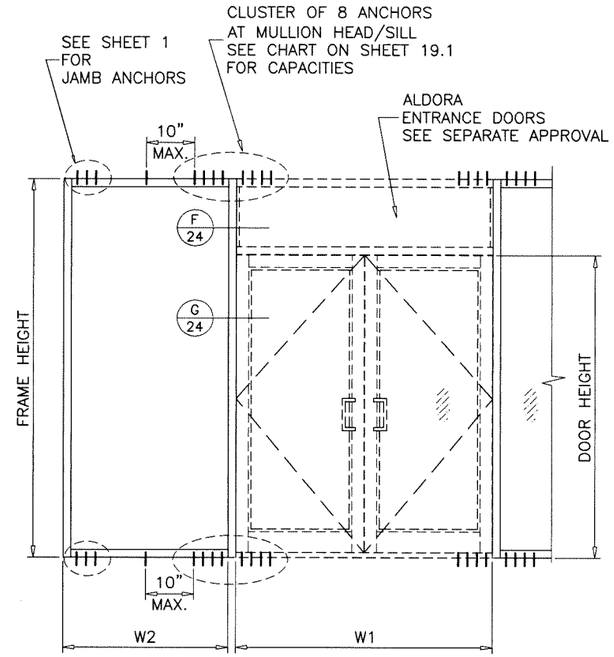

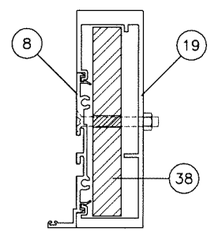

H.D. DOOR MULLION WITH REINF.
(LEVEL 'D' & 'E' IMPACT)

	Ix IN^4	Sx IN^3
ALUMINUM	11.342	3.497
STEEL	7.8125	3.125
TOTAL Ix ALUM + Ix STL X 2.9	33.7739	

Sealed: 8/19/2025

JALAL FAROOQ
LICENSE
No. 81223
STATE OF FLORIDA
PROFESSIONAL ENGINEER

DOOR MULLION

FL #19973

AL-FAROOQ CORPORATION
ENGINEERS & PRODUCT DEVELOPMENT
9360 SUNSET DRIVE, SUITE 220
MIAMI, FLORIDA 33173 (C.A.N. 3538)
TEL. (305) 264-8100 FAX. (305) 262-6978

COMP–ANL\21–51FAGP

SERIES FRONT SET ALUM WINDOWALL SYS. (L.M.I.)

Aldora Aluminum & Glass Products Inc.
4250 Coral Ridge Drive, Suite 101
Coral Springs, FL. 33065
Tel. (954) 784-6900 Fax. (954) 784-6901

revisions:

no	date	by	description

date: 06–10–21
scale: –
dr. by: TARIQ
chk. by:

drawing no. 21–51F

DOOR MULLION ANCHORS LOAD CAPACITY - PSF

NOMINAL DIMS.				1/4" MAX. SHIMS			3/8" MAX. SHIMS		
				ANCHOR TYPES 'AW' & 'AC'	ANCHOR TYPES 'CM"	ANCHOR TYPES 'BW' & 'BC'	ANCHOR TYPES 'BW' & 'BC'	ANCHOR TYPES 'CM"	ANCHOR TYPES 'BW' & 'BC'
FRAME HEIGHT INCHES	DOOR HEIGHT INCHES	WIDTH (W1) INCHES	WIDTH (W2) INCHES	EXT. (+) INT. (−)	EXT. (+) INT. (−)	EXT. (+) INT. (−)	EXT. (+) INT. (−)	EXT. (+) INT. (−)	EXT. (+) INT. (−)
144	84	84	30	86.2	100.0	100.0	66.6	61.8	86.5
			36	81.2	100.0	100.0	62.7	58.1	81.5
			42	76.7	100.0	100.0	59.2	54.9	77.0
			48	72.7	100.0	95.6	56.1	52.1	72.9
			54	69.0	100.0	90.8	53.3	49.5	69.3
			60	65.8	96.9	86.5	50.8	47.1	66.0
		92	30	80.9	100.0	100.0	62.5	58.0	81.2
			36	76.4	100.0	100.0	59.0	54.8	76.7
			42	72.5	100.0	95.3	55.9	51.9	72.7
			48	68.9	100.0	90.6	53.2	49.3	69.1
			54	65.6	96.6	86.3	50.6	47.0	65.9
			60	62.6	92.3	82.4	48.4	44.9	62.9
		98-7/16	30	77.1	100.0	100.0	59.5	55.2	77.4
			36	73.0	100.0	96.1	56.4	52.3	73.3
			42	69.4	100.0	91.3	53.6	49.7	69.6
			48	66.1	97.3	86.9	51.0	47.3	66.3
			54	63.1	92.9	83.0	48.7	45.2	63.3
			60	60.3	88.9	79.3	46.6	43.2	60.6
	96	84	30	83.2	100.0	100.0	64.2	59.6	83.5
			36	78.5	100.0	100.0	60.6	56.2	78.8
			42	74.3	100.0	97.7	57.4	53.2	74.6
			48	70.5	100.0	92.7	54.4	50.5	70.8
			54	67.1	98.8	88.3	51.8	48.1	67.4
			60	64.0	94.3	84.2	49.4	45.8	64.2
		92	30	78.0	100.0	100.0	60.2	55.9	78.3
			36	73.8	100.0	97.1	57.0	52.9	74.1
			42	70.1	100.0	92.2	54.1	50.2	70.4
			48	66.7	98.3	87.8	51.5	47.8	67.0
			54	63.7	93.8	83.8	49.2	45.6	63.9
			60	60.9	89.7	80.1	47.0	43.6	61.1
		98-7/16	30	74.3	100.0	97.7	57.3	53.2	74.6
			36	70.5	100.0	92.7	54.4	50.5	70.8
			42	67.1	98.8	88.2	51.8	48.1	67.3
			48	64.0	94.3	84.2	49.4	45.8	64.2
			54	61.2	90.1	80.5	47.2	43.8	61.4
			60	58.6	86.3	77.1	45.2	42.0	58.8
	108	84	30	80.4	100.0	100.0	62.1	57.6	80.7
			36	76.0	100.0	99.9	58.7	54.4	76.3
			42	72.0	100.0	94.8	55.6	51.6	72.3
			48	68.5	100.0	90.1	52.9	49.1	68.7
			54	65.3	96.1	85.8	50.4	46.7	65.5
			60	62.3	91.8	82.0	48.1	44.6	62.6
		92	30	75.3	100.0	99.0	58.1	53.9	75.6
			36	71.4	100.0	93.9	55.1	51.2	71.7
			42	67.9	100.0	89.3	52.4	48.7	68.2
			48	64.7	95.4	85.2	50.0	46.4	65.0
			54	61.9	91.1	81.4	47.8	44.3	62.1
			60	59.2	87.2	77.9	45.7	42.4	59.4
		98-7/16	30	71.6	100.0	94.2	55.3	51.3	71.9
			36	68.1	100.0	89.6	52.6	48.8	68.4
			42	64.9	95.7	85.4	50.1	46.5	65.2
			48	62.0	91.4	81.6	47.9	44.4	62.3
			54	59.4	87.5	78.1	45.8	42.5	59.6
			60	56.9	83.9	74.9	44.0	40.8	57.2

DOOR MULLION ANCHORS LOAD CAPACITY - PSF

NOMINAL DIMS.				1/4" MAX. SHIMS			3/8" MAX. SHIMS		
				ANCHOR TYPES 'AW' & 'AC'	ANCHOR TYPES 'CM"	ANCHOR TYPES 'BW' & 'BC'	ANCHOR TYPES 'BW' & 'BC'	ANCHOR TYPES 'CM"	ANCHOR TYPES 'BW' & 'BC'
FRAME HEIGHT INCHES	DOOR HEIGHT INCHES	WIDTH (W1) INCHES	WIDTH (W2) INCHES	EXT. (+) INT. (−)	EXT. (+) INT. (−)	EXT. (+) INT. (−)	EXT. (+) INT. (−)	EXT. (+) INT. (−)	EXT. (+) INT. (−)
144	118-1/4	84	30	78.1	100.0	100.0	60.3	56.0	78.4
			36	74.0	100.0	97.3	57.1	53.0	74.2
			42	70.2	100.0	92.4	54.2	50.3	70.5
			48	66.8	98.5	87.9	51.6	47.9	67.1
			54	63.8	93.9	83.9	49.2	45.7	64.0
			60	61.0	89.8	80.2	47.1	43.7	61.2
		92	30	73.1	100.0	96.2	56.5	52.4	73.4
			36	69.5	100.0	91.4	53.6	49.8	69.7
			42	66.2	97.4	87.0	51.1	47.4	66.4
			48	63.1	93.0	83.1	48.8	45.2	63.4
			54	60.4	89.0	79.4	46.6	43.3	60.6
			60	57.9	85.2	76.1	44.7	41.5	58.1
		98-7/16	30	69.5	100.0	91.5	53.7	49.8	69.8
			36	66.2	97.6	87.1	51.1	47.4	66.5
			42	63.2	93.1	83.1	48.8	45.3	63.4
			48	60.4	89.0	79.5	46.7	43.3	60.7
			54	57.9	85.3	76.2	44.7	41.5	58.1
			60	55.6	81.9	73.1	42.9	39.8	55.8

INTERPOLATION BETWEEN WIDTHS OR HEIGHTS ALLOWED.

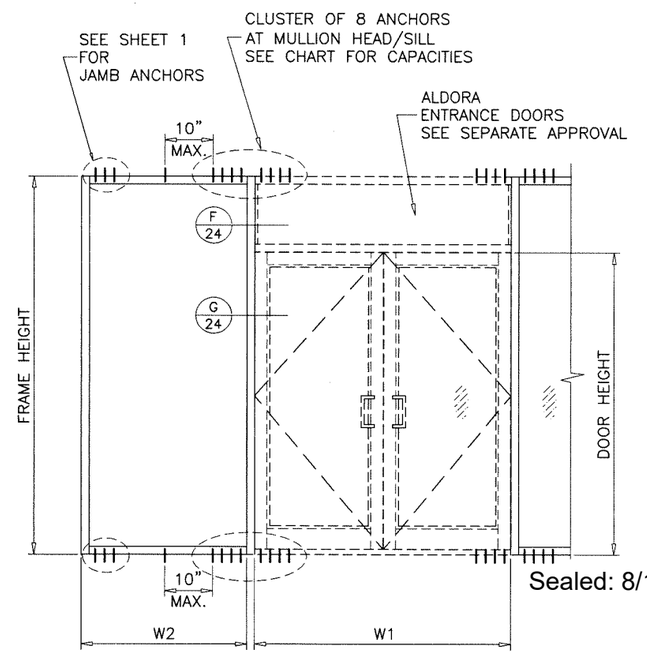

Sealed: 8/19/2025

DOOR MULLION

FL #19973

JALAL FAROOQ
LICENSE
No. 81223
STATE OF FLORIDA
PROFESSIONAL ENGINEER

AL-FAROOQ CORPORATION
ENGINEERS & PRODUCT DEVELOPMENT
9360 SUNSET DRIVE, SUITE 220
MIAMI, FLORIDA 33173 (C.A.N. 3538)
TEL. (305) 264-8100 FAX. (305) 262-6978
COMP-ANL\21-51FAGP

SERIES FRONT SET ALUM WINDOWALL SYS. (L.M.I.)

Aldora Aluminum & Glass Products Inc.
4250 Coral Ridge Drive, Suite 101
Coral Springs, FL. 33065
Tel. (954) 784-6900 Fax. (954) 784-6901

revisions:

no	date	by	description

date: 06-10-21
scale: -
dr. by: TARIQ
chk. by:

drawing no. 21-51F

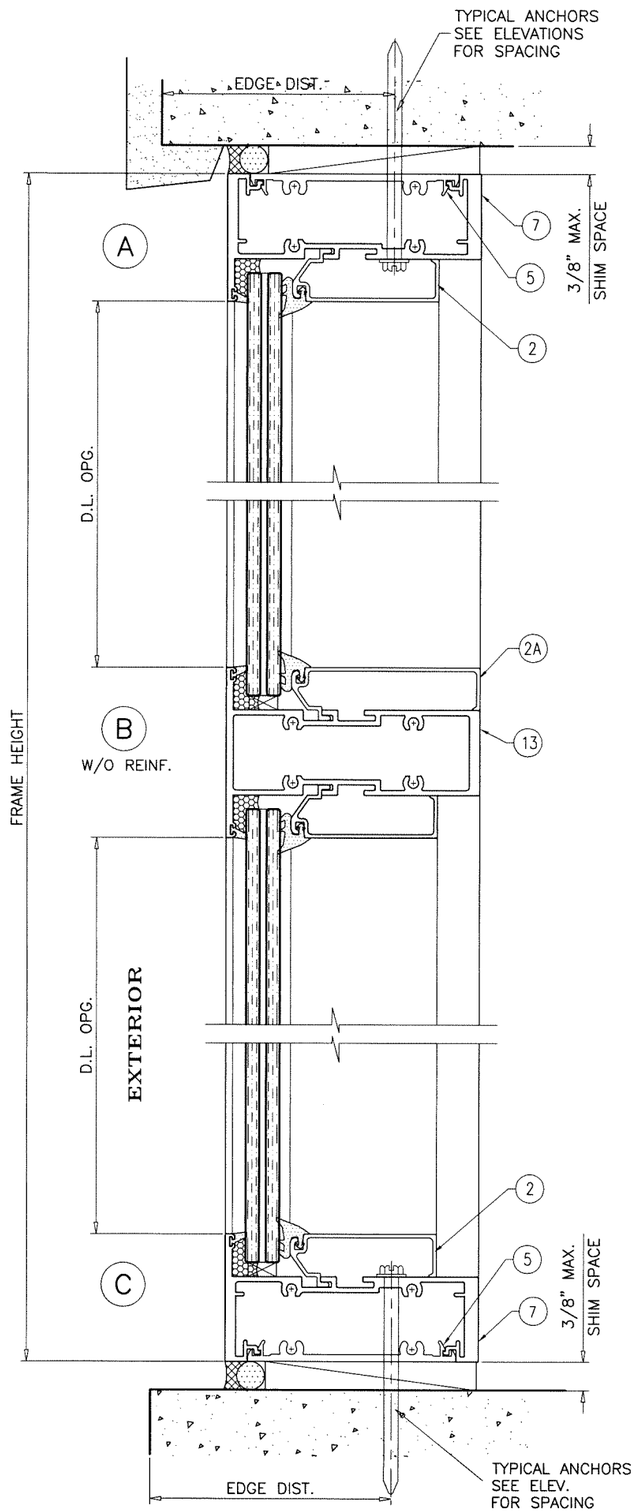

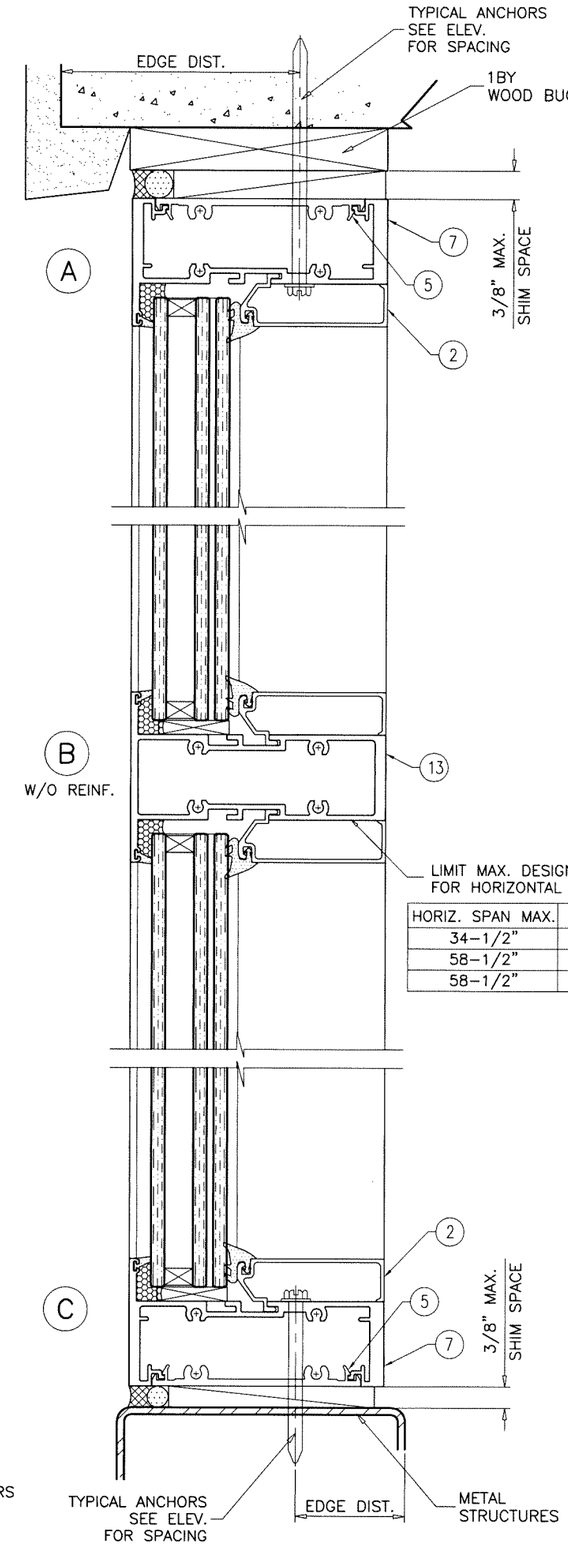

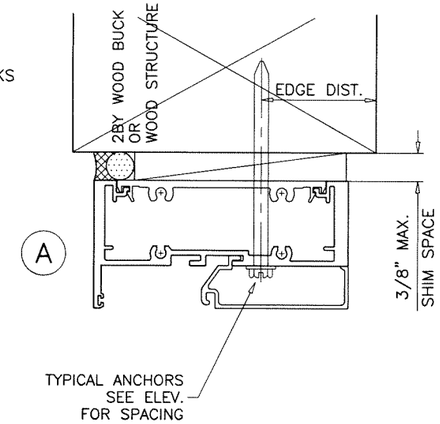

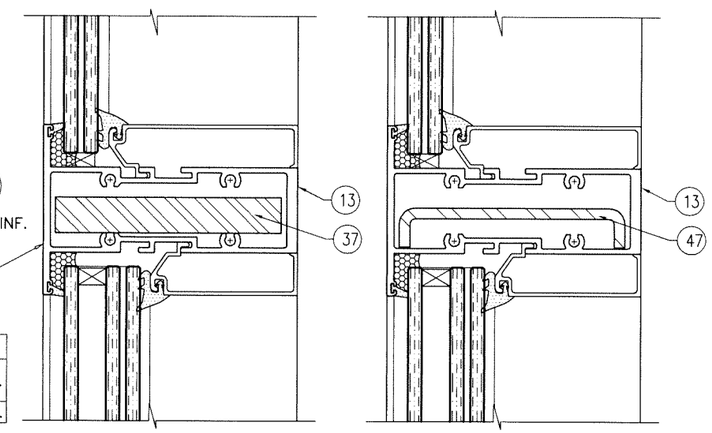

LIMIT MAX. DESIGN LOADS
FOR HORIZONTAL AS FOLLOWS

HORIZ. SPAN MAX.	LOAD CAPACITY – PSF	
34–1/2"	135.0	W/O REINF.
58–1/2"	78.0	
58–1/2"	100.0	WITH REINF.

Sealed: 8/19/2025

JALAL FAROOQ
LICENSE
No. 81223
STATE OF FLORIDA
PROFESSIONAL ENGINEER

FL #19973

AL-FAROOQ CORPORATION
ENGINEERS & PRODUCT DEVELOPMENT
9360 SUNSET DRIVE, SUITE 220
MIAMI, FLORIDA 33173 (C.A.N. 3538)
TEL. (305) 264-8100 FAX. (305) 262-6978

COMP-ANL\21-51FAGP

SERIES FRONT SET ALUM WINDOWALL SYS. (L.M.I.)

Aldora Aluminum & Glass Products Inc.
4250 Coral Ridge Drive, Suite 101
Coral Springs, FL. 33065
Tel. (954) 784-6900 Fax. (954) 784-6901

revisions:

no	date	by	description

date: 06-10-21
scale: 3/8" = 1"
dr. by: TARIQ
chk. by:

drawing no.
21-51F

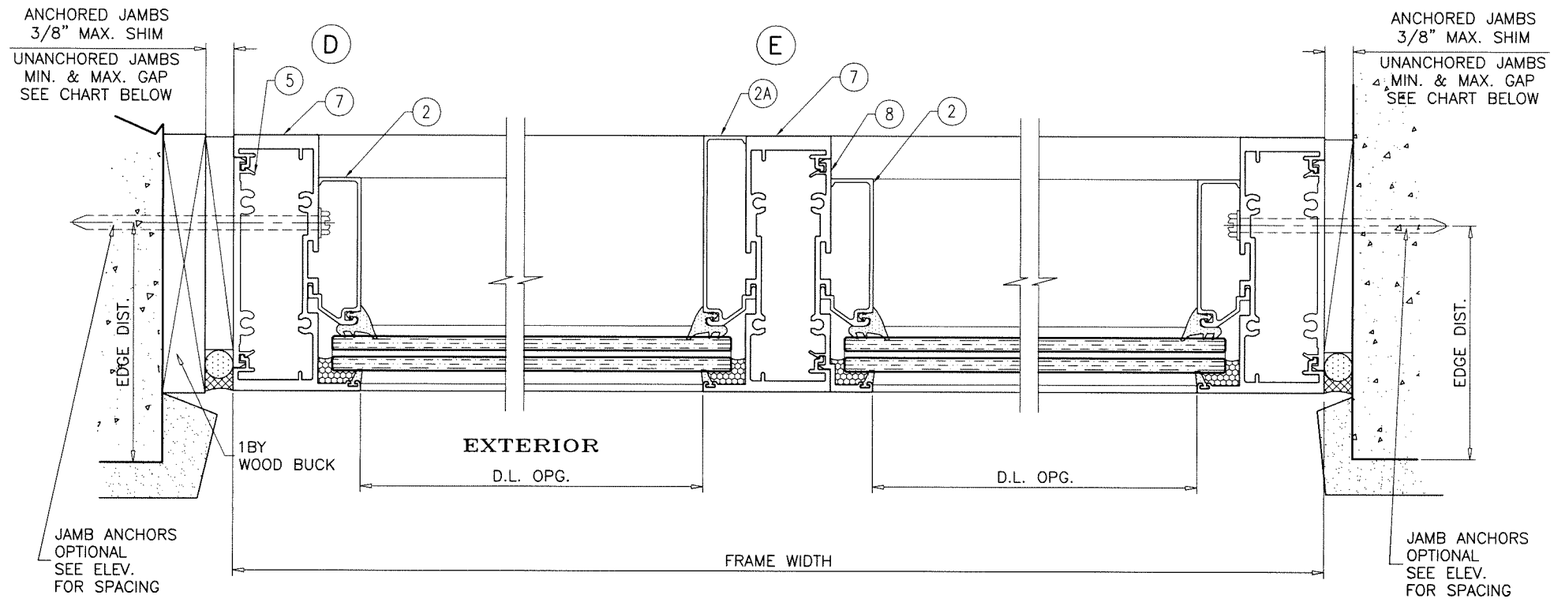

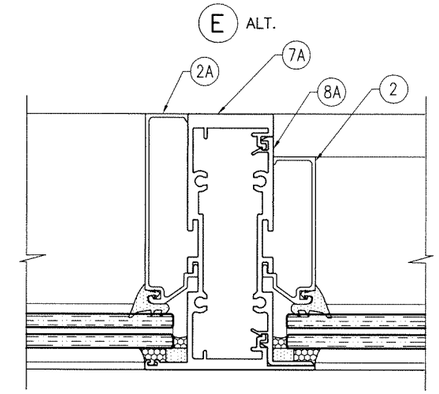

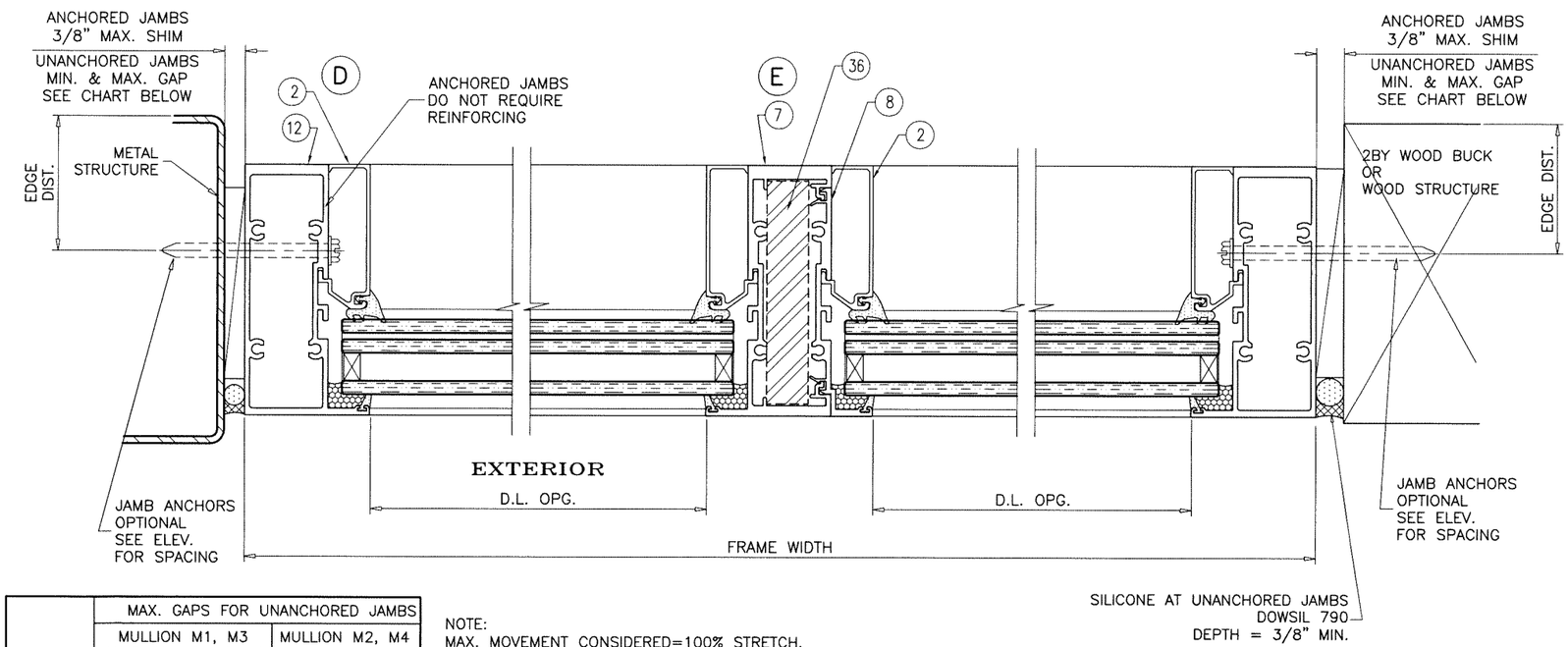

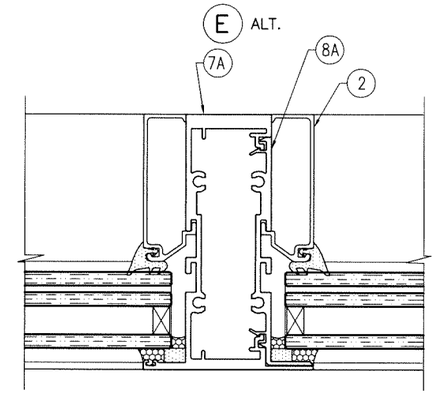

MAX. FRAME HEIGHT	MAX. GAPS FOR UNANCHORED JAMBS			
	MULLION M1, M3 JAMB J1, J2, J3, J5		MULLION M2, M4 JAMB J2, J4	
	MIN.	MAX.	MIN.	MAX.
84"	1/4"	1"	1/4"	1"
96"	1/4"	1"	1/4"	1"
108"	1/4"	1"	3/8"	1"
120"	1/4"	1"	3/8"	1"
132"	–	–	3/8"	1"
144"	–	–	3/8"	1"

NOTE:
MAX. MOVEMENT CONSIDERED=100% STRETCH.
PLEASE REFER TO SEALANT MANUFACTURER'S DATA AND APPLICATION MANUAL FOR COMPATABILITY OF SEALANT TO SUBSTRATE & WINDOWALL MATERIAL/FINISH AND COMPLIANCE FOR WARRANTY.
REFER TO ACI–117–10 FOR CONSTRUCTION TOLERANCES.

ALTERNATE SEALANTS AT JAMB GAPS CAN BE DESIGNED BY ENGINEER OF RECORD BASED ON MANUFACTURER GUIDE LINES.

GAPS LESS THAN 1/4" MAY BE DESIGNED BY ENGINEER OF RECORD BY THE USE OF BOND BREAKER TAPE OR 15% OF GAP ALLOWED MOVEMENT.

REFER TO SHEETS 4 THRU 7 FOR SELECTION OF MULLION/JAMB WITH REINFORCED & UNREINFORCED FRAMES.

Sealed: 8/19/2025

JALAL FAROOQ
LICENSE
No. 81223
STATE OF FLORIDA
PROFESSIONAL ENGINEER

FL #19973

AL-FAROOQ CORPORATION
ENGINEERS & PRODUCT DEVELOPMENT
9360 SUNSET DRIVE, SUITE 220
MIAMI, FLORIDA 33173 (C.A.N. 3538)
TEL. (305) 264-8100 FAX. (305) 262-6978

COMP–ANL\21–51FAGP

SERIES FRONT SET ALUM WINDOWALL SYS. (L.M.I.)

Aldora Aluminum & Glass Products Inc.
4250 Coral Ridge Drive, Suite 101
Coral Springs, FL. 33065
Tel. (954) 784-6900 Fax. (954) 784-6901

revisions:

no	date	by	description

date: 06–10–21
scale: 3/8" = 1"
dr. by: TARIQ
chk. by:

drawing no. 21–51F

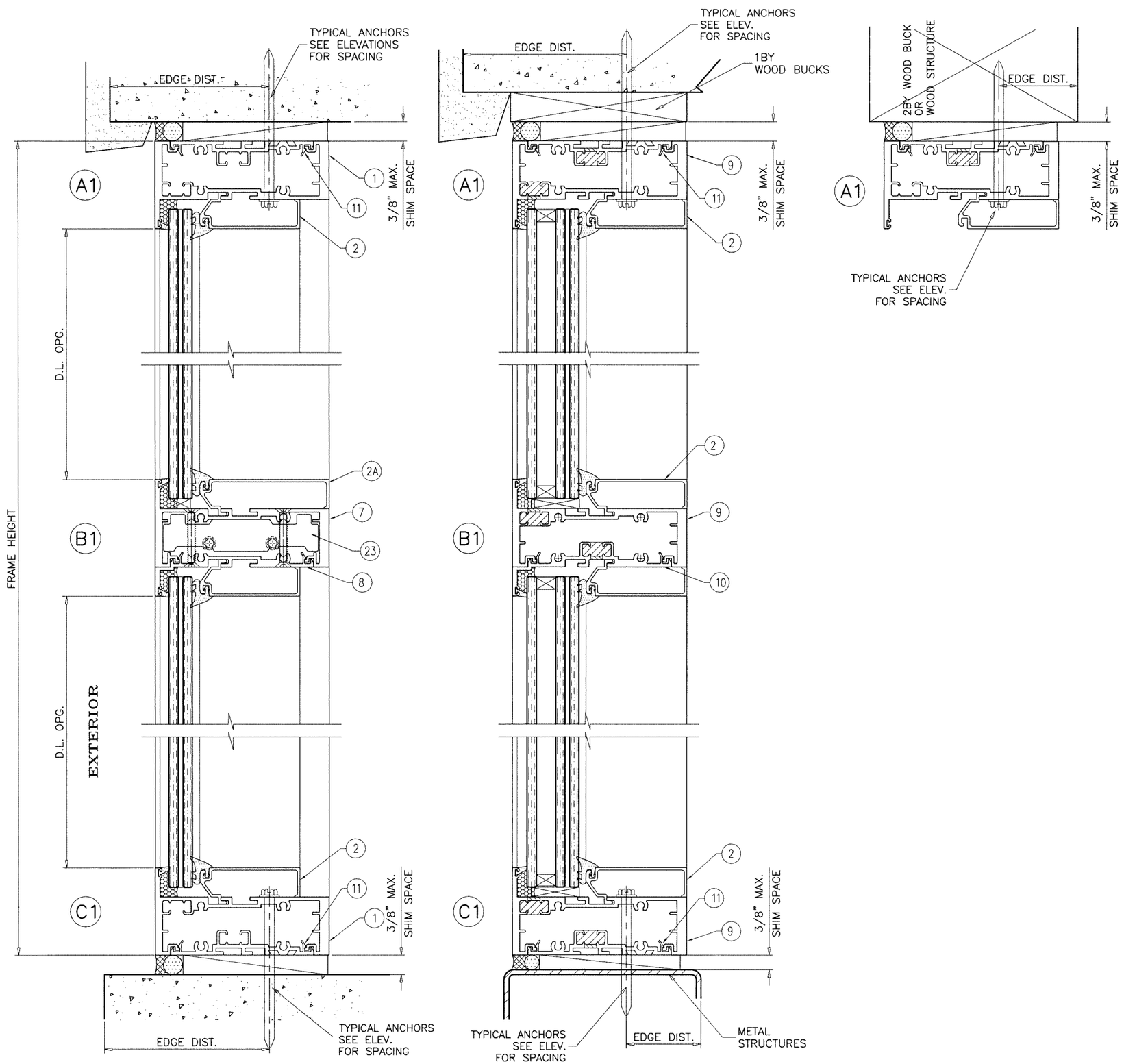

Sealed: 8/19/2025

FL #19973

JALAL FAROOQ
LICENSE
No. 81223
STATE OF FLORIDA
PROFESSIONAL ENGINEER

AL-FAROOQ CORPORATION
ENGINEERS & PRODUCT DEVELOPMENT
9360 SUNSET DRIVE, SUITE 220
MIAMI, FLORIDA 33173 (C.A.N. 3538)
TEL. (305) 264-8100 FAX. (305) 262-6978
COMP-ANL\21-51FAGP

SERIES FRONT SET ALUM WINDOWALL SYS. (L.M.I.)

Aldora Aluminum & Glass Products Inc.
4250 Coral Ridge Drive, Suite 101
Coral Springs, FL. 33065
Tel. (954) 784-6900 Fax. (954) 784-6901

revisions:

no	date	by	description

date: 06-10-21
scale: 3/8" = 1"
dr. by: TARIQ
chk. by:

drawing no.
21-51F

sheet 22 of 27

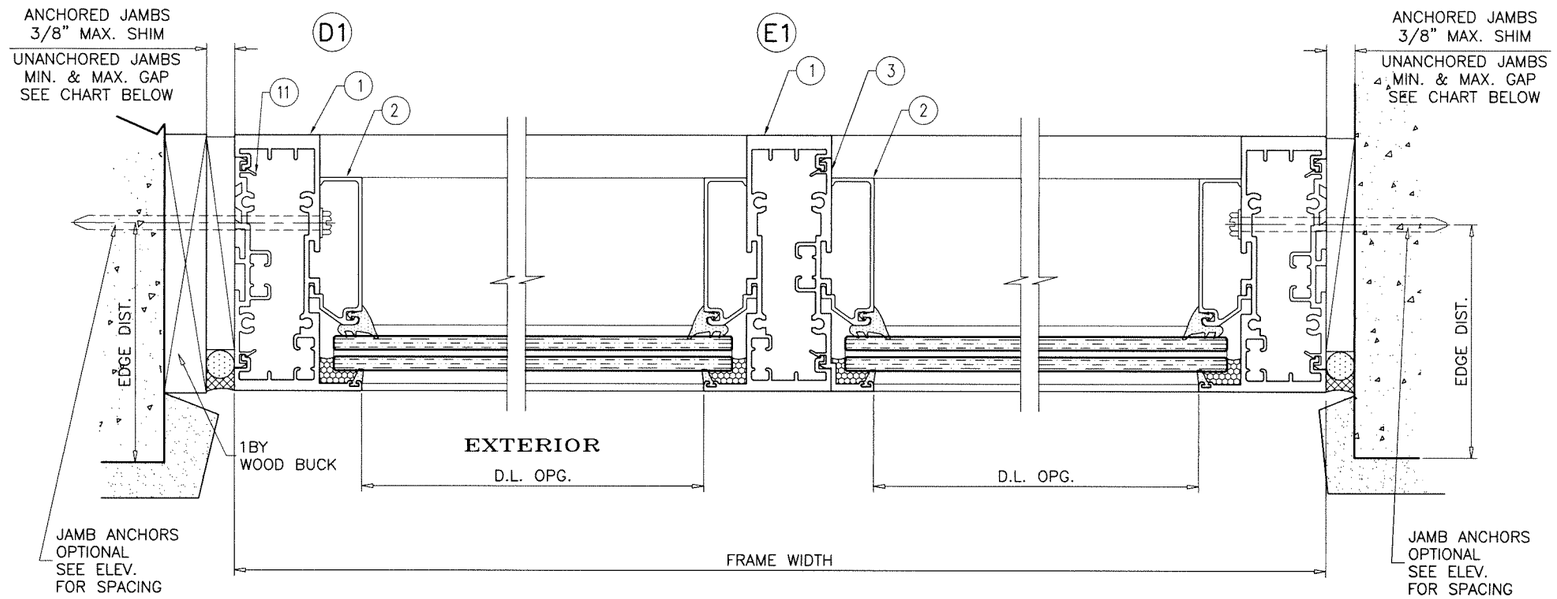

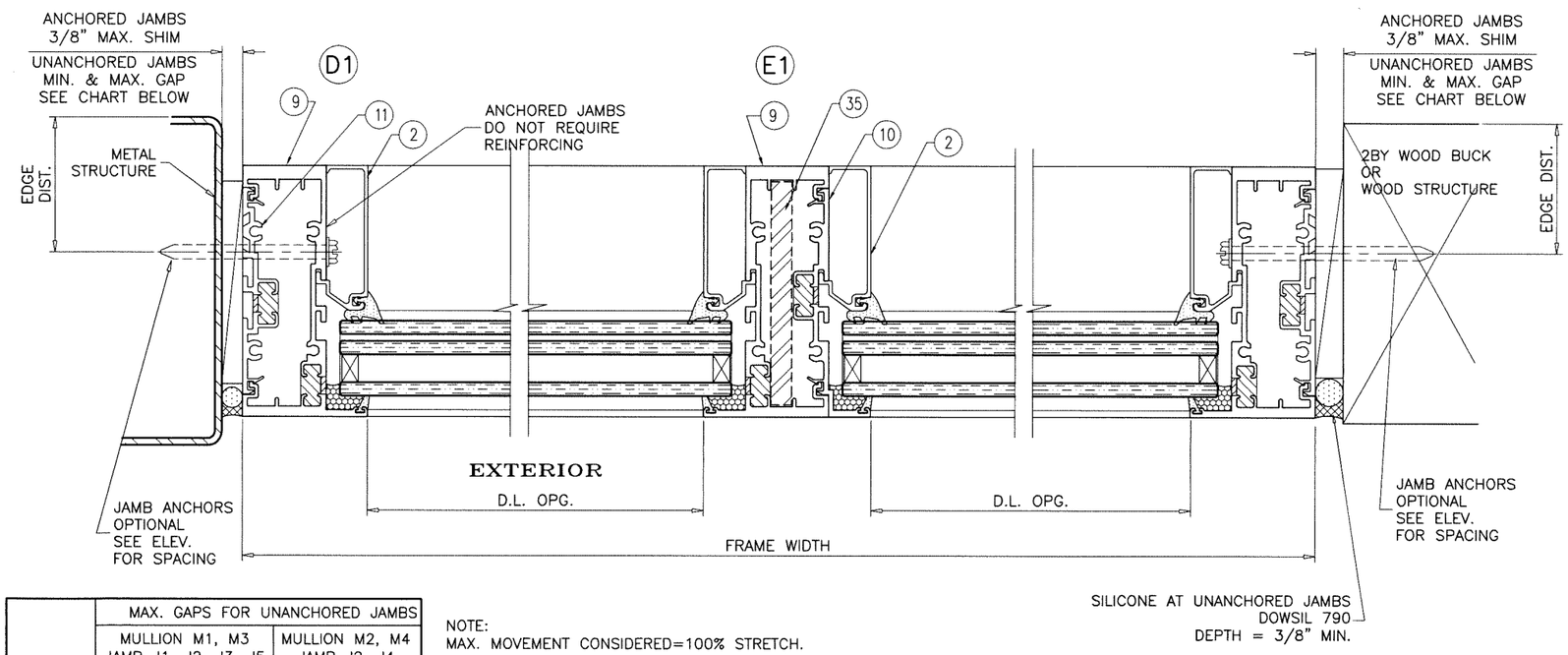

MAX. FRAME HEIGHT	MAX. GAPS FOR UNANCHORED JAMBS			
	MULLION M1, M3 JAMB J1, J2, J3, J5		MULLION M2, M4 JAMB J2, J4	
	MIN.	MAX.	MIN.	MAX.
84"	1/4"	1"	1/4"	1"
96"	1/4"	1"	1/4"	1"
108"	1/4"	1"	3/8"	1"
120"	1/4"	1"	3/8"	1"
132"	–	–	3/8"	1"
144"	–	–	3/8"	1"

NOTE:
MAX. MOVEMENT CONSIDERED=100% STRETCH.
PLEASE REFER TO SEALANT MANUFACTURER'S DATA AND APPLICATION MANUAL FOR COMPATABILITY OF SEALANT TO SUBSTRATE & WINDOWALL MATERIAL/FINISH AND COMPLIANCE FOR WARRANTY.
REFER TO ACI–117–10 FOR CONSTRUCTION TOLERANCES.

ALTERNATE SEALANTS AT JAMB GAPS CAN BE DESIGNED BY ENGINEER OF RECORD BASED ON MANUFACTURER GUIDE LINES.

GAPS LESS THAN 1/4" MAY BE DESIGNED BY ENGINEER OF RECORD BY THE USE OF BOND BREAKER TAPE OR 15% OF GAP ALLOWED MOVEMENT.

REFER TO SHEETS 4 THRU 7 FOR SELECTION OF MULLION/JAMB WITH REINFORCED & UNREINFORCED FRAMES.

Sealed: 8/19/2025

JALAL FAROOQ
LICENSE
No. 81223
STATE OF FLORIDA
PROFESSIONAL ENGINEER

FL #19973

AL-FAROOQ CORPORATION
ENGINEERS & PRODUCT DEVELOPMENT
9360 SUNSET DRIVE, SUITE 220
MIAMI, FLORIDA 33173 (C.A.N. 3538)
TEL. (305) 264-8100 FAX. (305) 262-6978

COMP–ANL\21–51FAGP

SERIES FRONT SET ALUM WINDOWALL SYS. (L.M.I.)

Aldora Aluminum & Glass Products Inc.
4250 Coral Ridge Drive, Suite 101
Coral Springs, FL. 33065
Tel. (954) 784–6900 Fax. (954) 784–6901

revisions:

no	date	by	description

date: 06–10–21
scale: 3/8" = 1"
dr. by: TARIQ
chk. by:

drawing no.
21–51F

SEE SEPARATE APPROVAL FOR DESIGN LOAD CAPACITY OF DOORS AND DOOR ANCHORS.

LOWER VALUES FROM DOORS APPROVAL OR STOREFRONT SYSTEM CAPACITY CHARTS WILL APPLY TO ENTIRE SYSTEM.

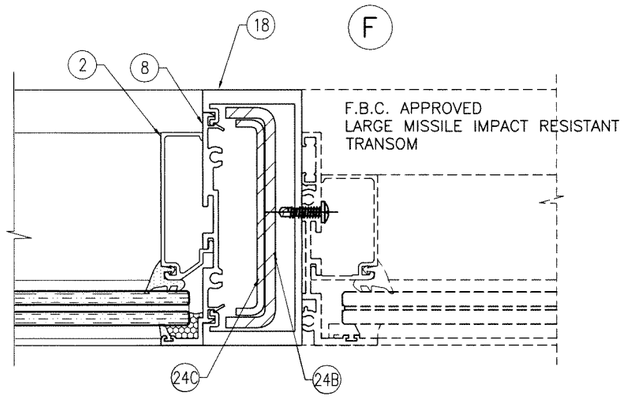

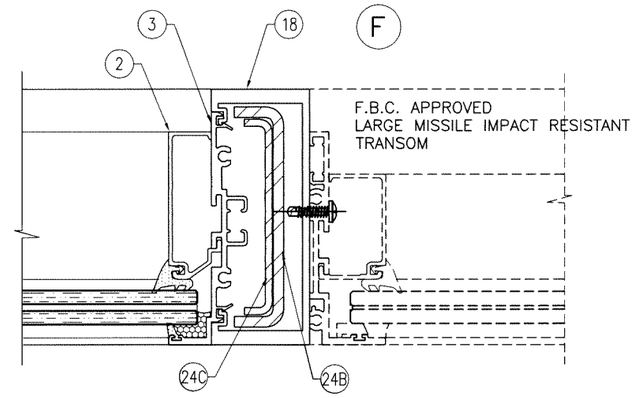

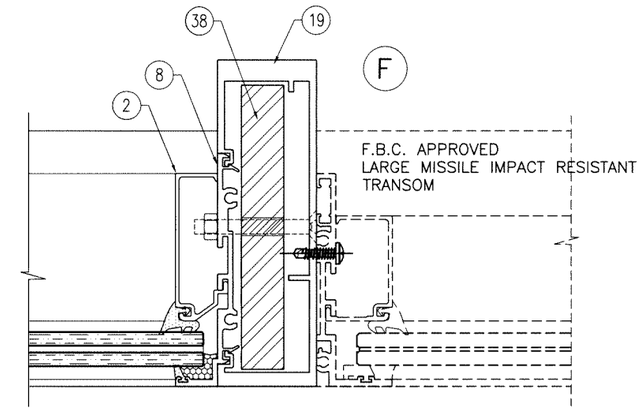

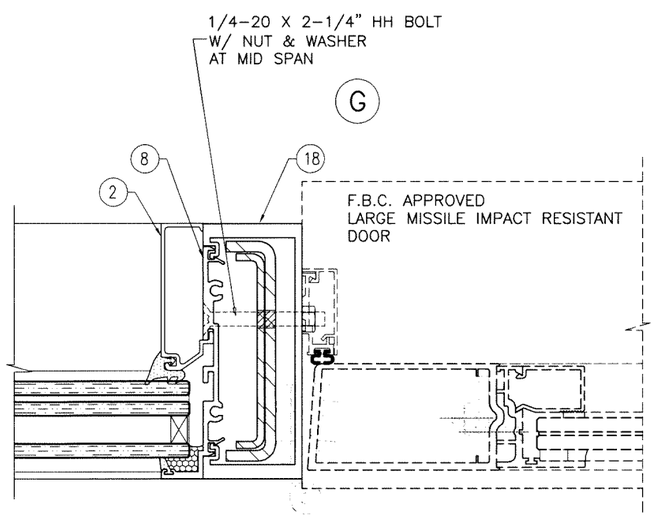

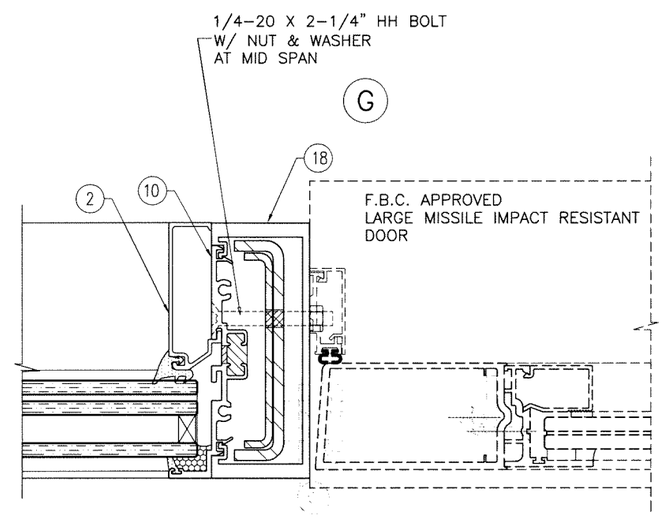

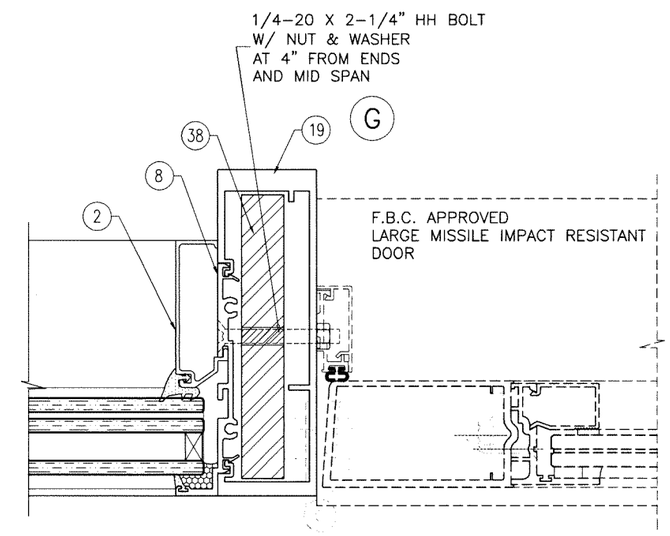

Sealed: 8/19/2025

JALAL FAROOQ
LICENSE
No. 81223
STATE OF FLORIDA
PROFESSIONAL ENGINEER

FL #19973

AL-FAROOQ CORPORATION
ENGINEERS & PRODUCT DEVELOPMENT
9360 SUNSET DRIVE, SUITE 220
MIAMI, FLORIDA 33173 (C.A.N. 3538)
TEL. (305) 264-8100 FAX. (305) 262-6978

COMP-ANL\21-51FAGP

SERIES FRONT SET ALUM WINDOWALL SYS. (L.M.I.)

Aldora Aluminum & Glass Products Inc.
4250 Coral Ridge Drive, Suite 101
Coral Springs, FL. 33065
Tel. (954) 784-6900 Fax. (954) 784-6901

revisions:

no	date	by	description

date: 06-10-21
scale: 3/8" = 1"
dr. by: TARIQ
chk. by:

drawing no. 21-51F

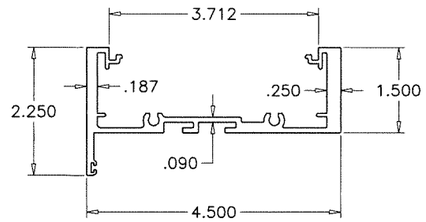

7 HEAD/SILL/JAMB/INTERMEDIATE & MULLION

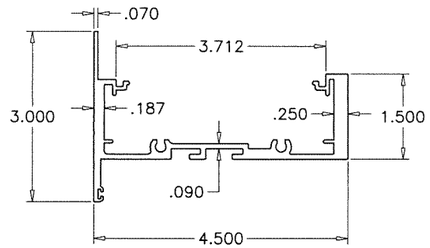

7A INTERMEDIATE HORIZ. & MULLION TYPE 2

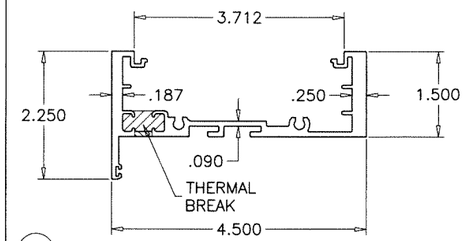

9 POUR & DEBRIDGE HEAD/SILL/JAMB/INTERMEDIATE & MULLION

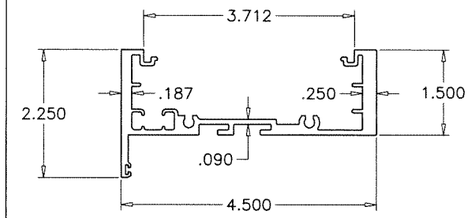

1 HEAD/SILL/JAMB/INTERMEDIATE & MULLION

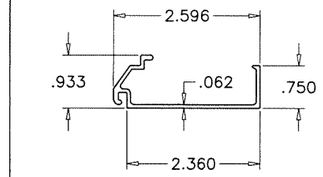

2 GLASS STOP

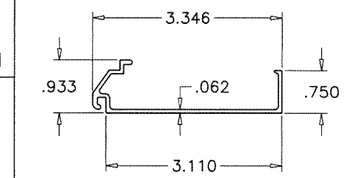

2A GLASS STOP

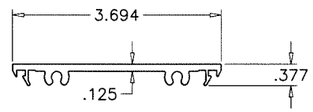

5 PLAIN SNAP

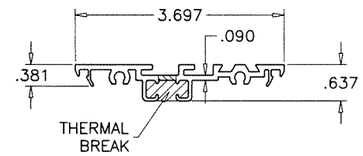

11 POUR AND DEBRIDGE PLAIN SNAP

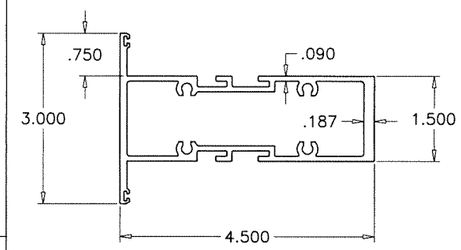

13 INTERMEDIATE HORIZONTAL

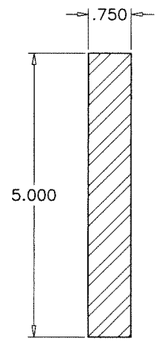

38 DOOR JAMB REINF. BAR

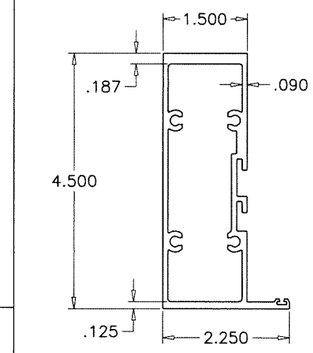

12 HEAD/JAMB/SILL

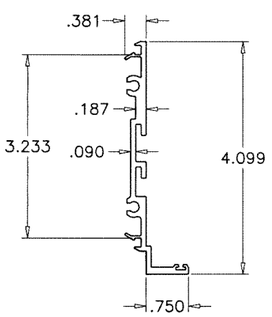

8 FIN SNAP

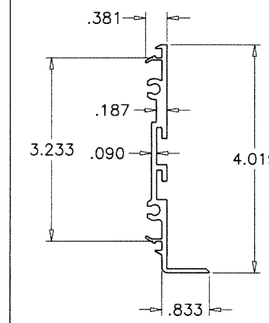

8A FIN SNAP TYPE 2

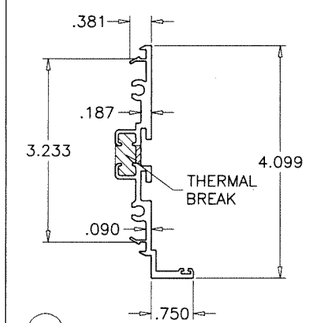

10 POUR & DEBRIDGE FIN SNAP

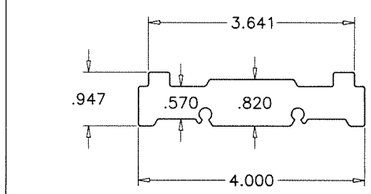

23 SHEAR BLOCK

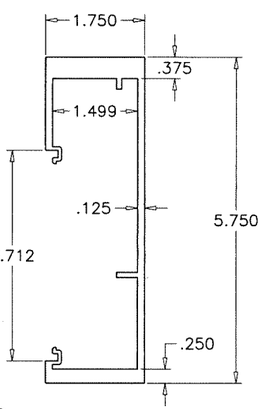

19 H.D. DOOR FRAME JAMB

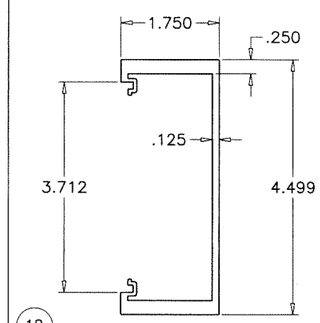

18 STD. DOOR FRAME JAMB

THERMAL BREAK:
FRAME MEMBERS FILLED AND DEBRIDGED USING
'AZON SU312-19T' STRUCTURAL THERMAL BARRIER POLYMER
MANUFACTURED BY 'AZON USA INC.'.

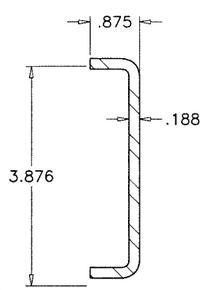

24B DOOR REINF. CHANNEL

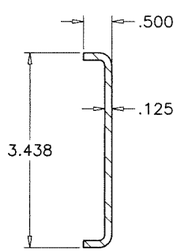

24C DOOR REINF. CHANNEL

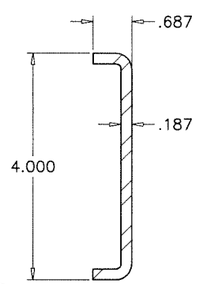

47 REINFORCING CHANNEL

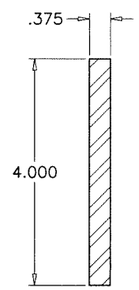

35 JAMB/MULLION REINF. BAR

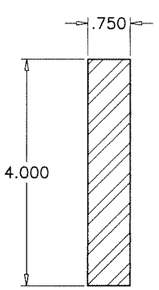

36 REINFORCING BAR

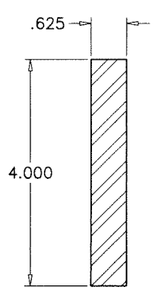

37 REINFORCING BAR

Sealed: 8/19/2025

JALAL FAROOQ
LICENSE
No. 81223
STATE OF FLORIDA
PROFESSIONAL ENGINEER

FL #19973

AL-FAROOQ CORPORATION
ENGINEERS & PRODUCT DEVELOPMENT
9360 SUNSET DRIVE, SUITE 220
MIAMI, FLORIDA 33173 (C.A.N. 3538)
TEL. (305) 264-8100 FAX. (305) 262-6978

COMP-ANL\21-51FAGP

SERIES FRONT SET ALUM WINDOWALL SYS. (L.M.I.)

Aldora Aluminum & Glass Products Inc.
4250 Coral Ridge Drive, Suite 101
Coral Springs, FL. 33065
Tel. (954) 784-6900 Fax. (954) 784-6901

revisions:

no	date	by	description

date: 06-10-21
scale: 3/8" = 1"
dr. by: TARIQ
chk. by:

drawing no. 21-51F

ITEM #	PART #	REQ'D	DESCRIPTION	MATERIAL	MANF. / SUPPLIER / REMARKS
1	SMI-311	AS REQ'D	HEAD, INTERM., SILL, JAMB AND MULLION- HEAVY.	6063-T6	-
2	SMI-312	AS REQ'D	GLASS STOP	6063-T6	-
2A	SMI-314	AS REQ'D	GLASS STOP (LARGER)	6063-T6	-
3	SMI-313	AS REQ'D	FIN SNAP	6063-T6	-
4	SMI-094	AS REQ'D	PLAIN SNAP	6063-T6	-
5	SMI-004	AS REQ'D	PLAIN SNAP	6063-T6	-
7	SMI-316	AS REQ'D	HEAD, INTERM., SILL, JAMB & MULLION- HEAVY	6063-T6	-
7A	SMI-321	AS REQ'D	INTERMEDIATE HORIZONTAL & MULLION- TYPE 2	6063-T6	-
8	SMI-317	AS REQ'D	FIN SNAP	6063-T6	-
8A	SMI-322	AS REQ'D	FIN SNAP TYPE 2	6063-T6	-
9	SMI-311T	AS REQ'D	POUR & DEBRIDGE HEAD, INTERM., SILL, JAMB & MULLION- HEAVY.	6063-T6	-
10	SMI-313T	AS REQ'D	POUR & DEBRIDGE FIN SNAP	6063-T6	-
11	SMI-094T	AS REQ'D	POUR & DEBRIDGE PLAIN SNAP	6063-T6	-
12	SMI-318	AS REQ'D	HEAD, JAMB & SILL.	6063-T6	-
13	SMI-319	AS REQ'D	INTERMEDIATE HORIZONTAL	6063-T6	-
18	SMI-005	AS REQ'D	STD. DOOR FRAME JAMB	6063-T6	-
19	SMI-076	AS REQ'D	H.D. DOOR FRAME JAMB	6005-T5	-
23	SMI-320	AS REQ'D	SHEAR BLOCK (1" LG.)	6063-T6	-
24B	7/8"X3 7/8"X7/8"	AS REQ'D	REINFORCING CHANNEL 3/16" THK.	STEEL	-
24C	1/2"X3 7/16"X1/2"	AS REQ'D	REINFORCING CHANNEL 1/8" THK.	STEEL	-
25	SMI-G01	AS REQ'D	GASKET (AT INTERIOR)	EPDM	TREMCO
26	SMI-G13	AS REQ'D	SPACER / RETAINER OUTER GASKET	SANTOPRENE	MELTPOINT PLASTICS INTERNATIONAL.
27	SMI-G02	AS REQ'D	SINGLE FACE FOAM TAPE (3/8" X 1/2")	VINYL FOAM	FRANK LOWE
31	SMI-SB04	2 PER GL.	SETTING BLOCKS (1/4" X 5/8" X 4" LG.)	EPDM	TREMCO, DUROMETER 80±5 SHORE A
34	SMI-SB07	2 PER GL.	SETTING BLOCKS (1/4" X 1 1/4" X 4" LG.)	EPDM	TREMCO, DUROMETER 80±5 SHORE A
35	3/8" X 4"	AS REQ'D	REINFORCING BAR	STEEL	A36, Fu MIN. = 58 KSI
36	3/4" X 4"	AS REQ'D	REINFORCING BAR	STEEL	A36, Fu MIN. = 58 KSI
37	5/8" X 4"	AS REQ'D	REINFORCING BAR	STEEL	A36, Fu MIN. = 58 KSI
38	3/4" X 5"	AS REQ'D	REINFORCING BAR	STEEL	A36, Fu MIN. = 58 KSI
46	#12 X 1 1/2"	4/CORNER	FRAME ASSEMBLY SCREWS	ST. STEEL	HEX. HEAD MACHINE SCREW
47	11/16"X 4" X 11/16"	AS REQ'D	JAMB/HORIZONTAL REINFORCING CHANNEL 3/16" THK.	STEEL	A36, Fu MIN. = 58 KSI

Sealed: 8/19/2025

JALAL FAROOQ
LICENSE
No. 81223
STATE OF FLORIDA
PROFESSIONAL ENGINEER

FL #19973

AL-FAROOQ CORPORATION
ENGINEERS & PRODUCT DEVELOPMENT
9360 SUNSET DRIVE, SUITE 220
MIAMI, FLORIDA 33173 (C.A.N. 3538)
TEL. (305) 264-8100 FAX. (305) 262-6978

COMP-ANL\21-51FAGP

SERIES FRONT SET ALUM WINDOWALL SYS. (L.M.I.)

Aldora Aluminum & Glass Products Inc.
4250 Coral Ridge Drive, Suite 101
Coral Springs, FL. 33065
Tel. (954) 784-6900 Fax. (954) 784-6901

revisions:

no	date	by	description

date: 06-10-21
scale: 3/8" = 1"
dr. by: TARIQ
chk. by:

drawing no. 21-51F

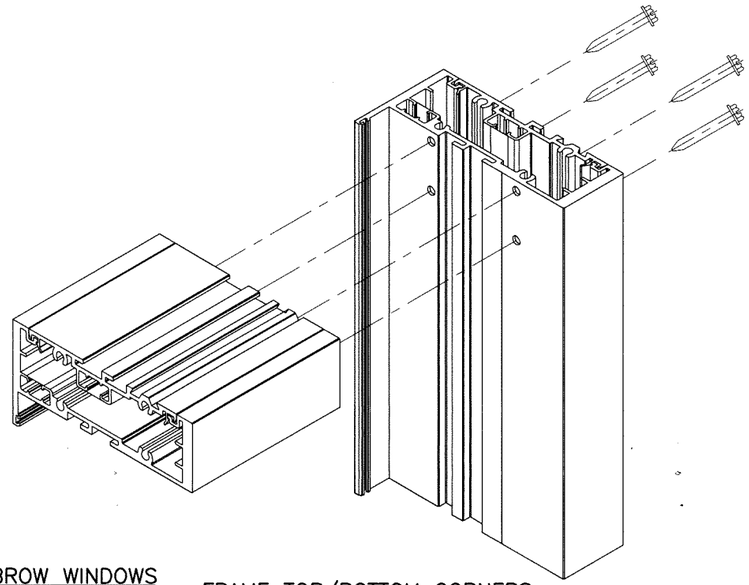

EYEBROW WINDOWS
TOP CORNER

FRAME TOP/BOTTOM CORNERS

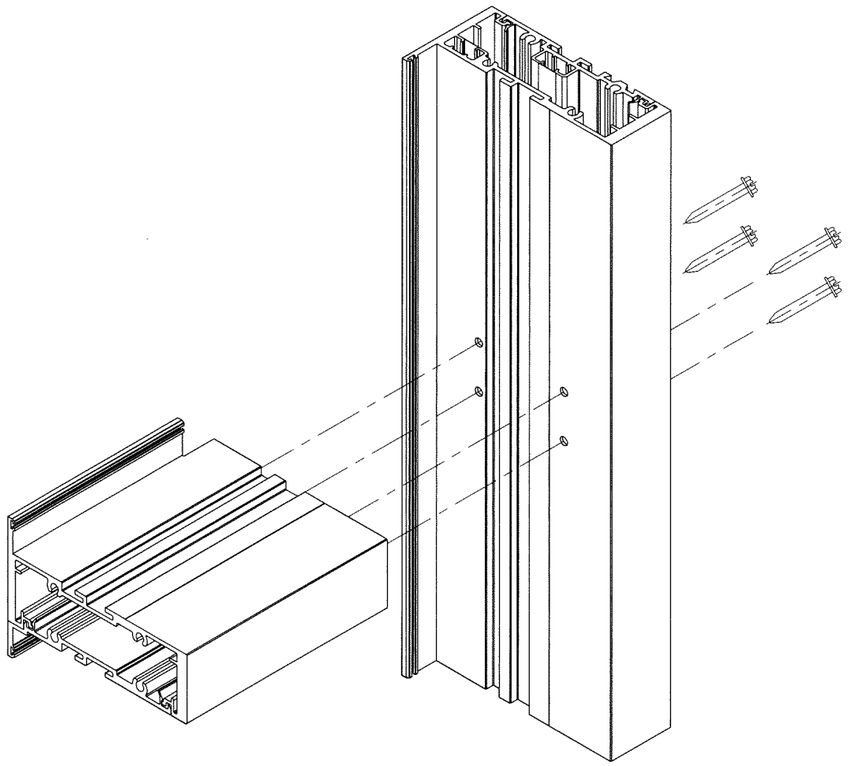

INTERMEDIATE HORIZONTAL CORNERS

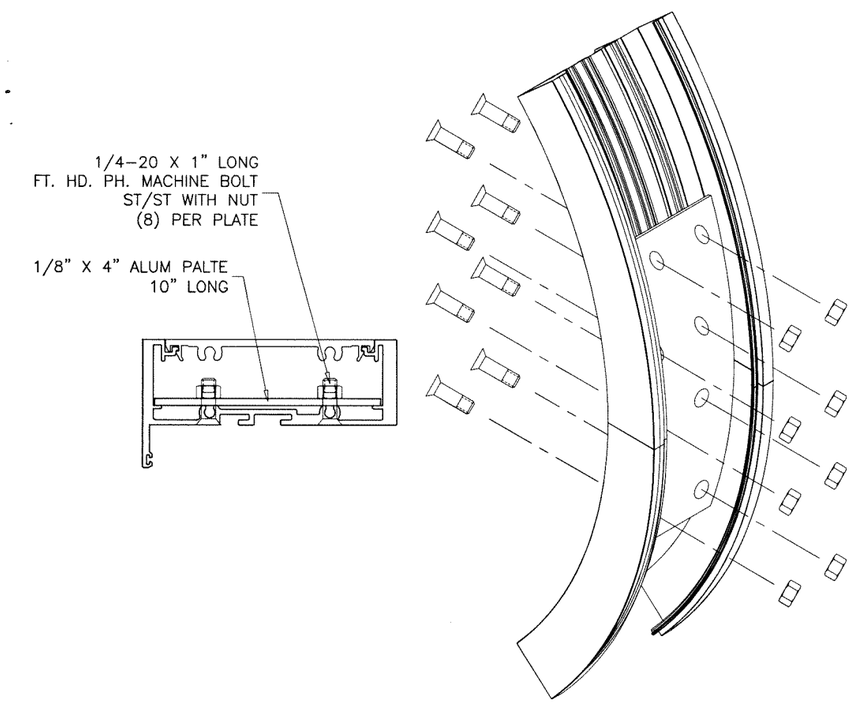

SPLICE JOINT AT
HALF & FULL CIRCLE CORNERS

Sealed: 8/19/2025

JALAL FAROOQ
LICENSE
No. 81223
STATE OF FLORIDA
PROFESSIONAL ENGINEER

FL #19973

AL-FAROOQ CORPORATION
ENGINEERS & PRODUCT DEVELOPMENT
9360 SUNSET DRIVE, SUITE 220
MIAMI, FLORIDA 33173 (C.A.N. 3538)
TEL. (305) 264-8100 FAX. (305) 262-6978

COMP-ANL\21-51FAGP

SERIES FRONT SET ALUM WINDOWALL SYS. (L.M.I.)

Aldora Aluminum & Glass Products Inc.
4250 Coral Ridge Drive, Suite 101
Coral Springs, FL. 33065
Tel. (954) 784-6900 Fax. (954) 784-6901

revisions:			
no	date	by	description

date: 06-10-21
scale: 3/8" = 1"
dr. by: TARIQ
chk. by:

drawing no.
21-51F